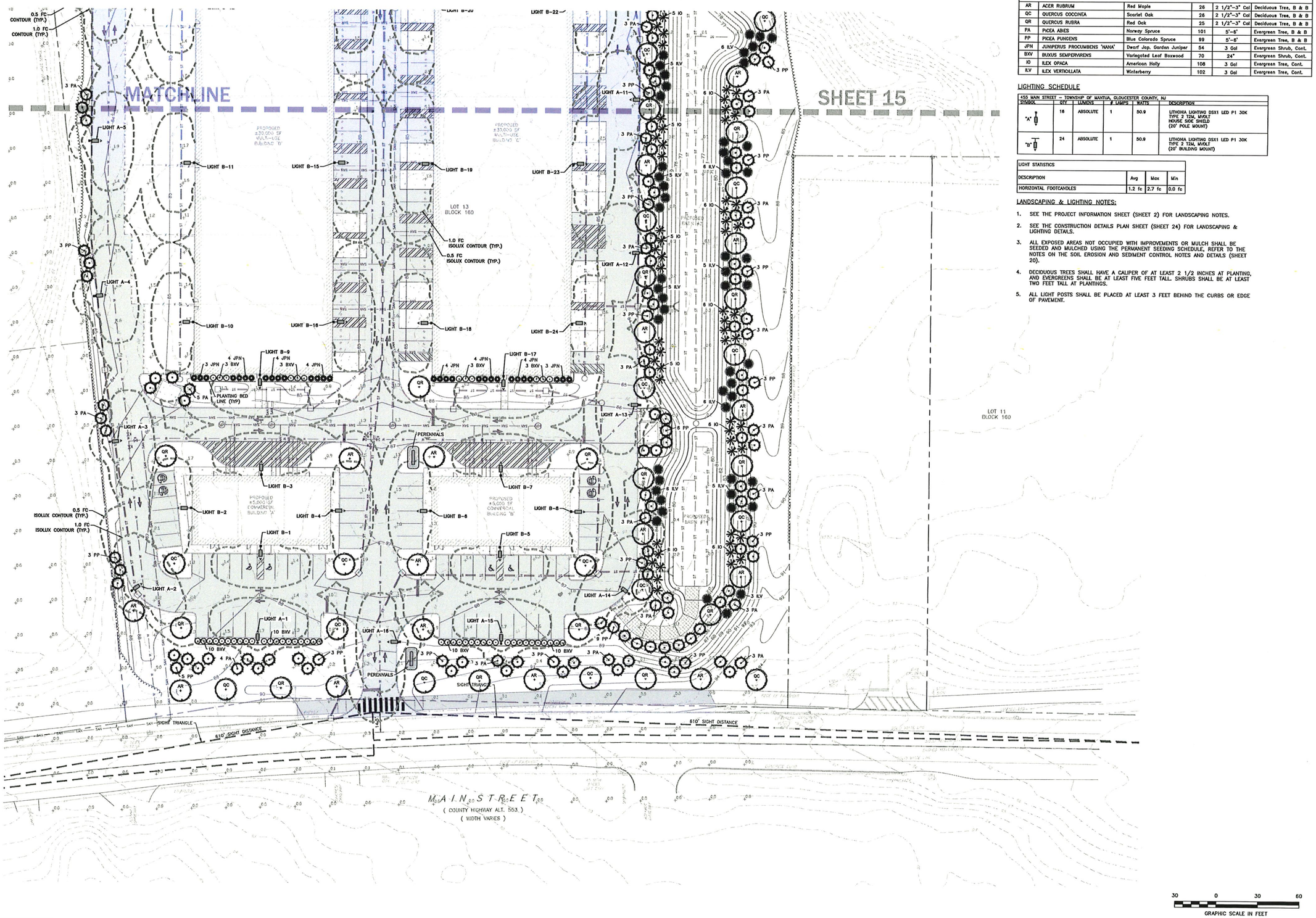

LANDSCAPE SCHEDULE

KEY	BOTANICAL NAME	COMMON NAME	QTY.	SIZE	TYPE
AR	ACER RUBRUM	Red Maple	26	2 1/2"-3" Cal	Deciduous Tree, B & B
QC	QUERCUS COCCINEA	Scarlet Oak	26	2 1/2"-3" Cal	Deciduous Tree, B & B
QR	QUERCUS RUBRA	Red Oak	25	2 1/2"-3" Cal	Deciduous Tree, B & B
PA	PICEA ABIES	Norway Spruce	101	5'-6'	Evergreen Tree, B & B
PP	PICEA PUNGENS	Blue Colorado Spruce	99	5'-6'	Evergreen Tree, B & B
JPN	JUNIPERUS PROCUMBENS 'NANA'	Dwarf Jap. Garden Juniper	54	3 Gal	Evergreen Shrub, Cont.
BXV	BUXUS SEMPERVIRENS	Variegated Leaf Boxwood	70	24"	Evergreen Shrub, Cont.
IO	ILEX OPACA	American Holly	108	3 Gal	Evergreen Tree, Cont.
ILV	ILEX VERTICILLATA	Winterberry	102	3 Gal	Evergreen Tree, Cont.

LIGHTING SCHEDULE

455 MAIN STREET – TOWNSHIP OF MANTUA, GLOUCESTER COUNTY, NJ

SYMBOL	QTY	LUMENS	# LAMPS	WATTS	DESCRIPTION
"A"	16	ABSOLUTE	1	50.9	LITHONIA LIGHTING DSX1 LED P1 30K TYPE 2 T2M, MVOLT HOUSE SIDE SHIELD (20' POLE MOUNT)
"B"	24	ABSOLUTE	1	50.9	LITHONIA LIGHTING DSX1 LED P1 30K TYPE 2 T2M, MVOLT (20' BUILDING MOUNT)

LIGHT STATISTICS

DESCRIPTION	Avg	Max	Min
HORIZONTAL FOOTCANDLES	1.2 fc	2.7 fc	0.0 fc

LANDSCAPING & LIGHTING NOTES:

1. SEE THE PROJECT INFORMATION SHEET (SHEET 2) FOR LANDSCAPING NOTES.
2. SEE THE CONSTRUCTION DETAILS PLAN SHEET (SHEET 24) FOR LANDSCAPING & LIGHTING DETAILS.
3. ALL EXPOSED AREAS NOT OCCUPIED WITH IMPROVEMENTS OR MULCH SHALL BE SEEDED AND MULCHED USING THE PERMANENT SEEDING SCHEDULE, REFER TO THE NOTES ON THE SOIL EROSION AND SEDIMENT CONTROL NOTES AND DETAILS (SHEET 20).
4. DECIDUOUS TREES SHALL HAVE A CALIPER OF AT LEAST 2 1/2 INCHES AT PLANTING, AND EVERGREENS SHALL BE AT LEAST FIVE FEET TALL. SHRUBS SHALL BE AT LEAST TWO FEET TALL AT PLANTINGS.
5. ALL LIGHT POSTS SHALL BE PLACED AT LEAST 3 FEET BEHIND THE CURBS OR EDGE OF PAVEMENT.

K2 Consulting Engineers, Inc.
Professional Civil Engineers
Certificate of Authorization #24GA28187400
36 Tanner Street, Suite 100
Haddonfield, NJ 08033
Phone - 856.310.5205
Fax - 856.616.2441
www.K2CE.com

DATE	REVISION	BY

LANDSCAPING AND LIGHTING PLAN
455 MAIN STREET
BLOCK 160 - LOT 13 - TAX MAP SHEET 31
SITUATE IN THE
TOWNSHIP OF MANTUA, GLOUCESTER COUNTY, NEW JERSEY

JOHN W. KORNICK, P.E.
Professional Engineer, New Jersey Lic. No. 24GE04928500

DATE: 06/30/2025
DESIGN BY: WFR
DRAWN BY: WFR
SCALE: 1"=30'
JOB NO.: PD23-129
SHEET 14 OF 27

DWG. NAME: W:\PROJECT FILES\PD23 Projects\PD23-129 - 455 Main Street, Twp of Mantua, Gloucester County\09-AUTOCAD\DESIGN\III.dwg

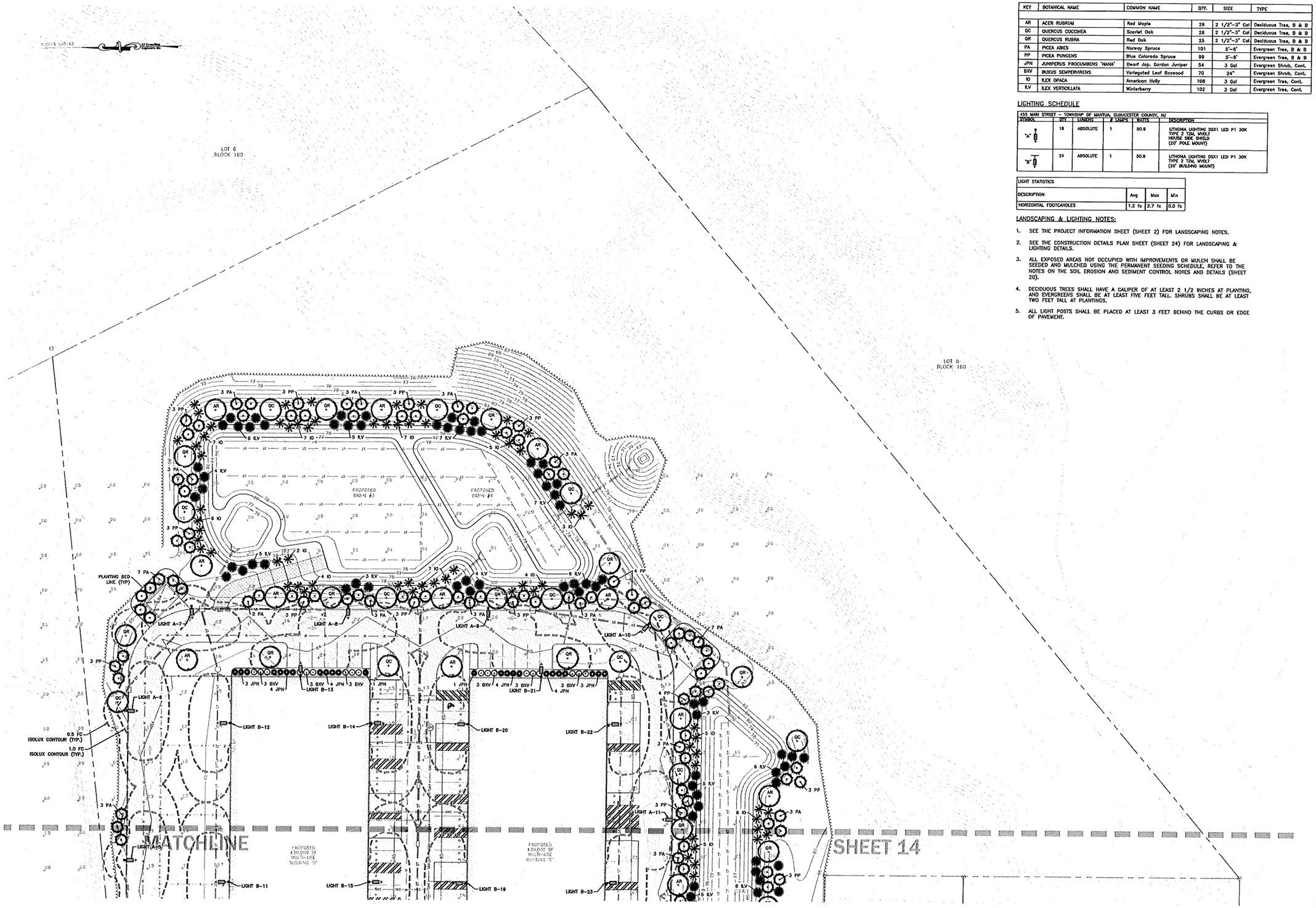

LANDSCAPE SCHEDULE

KEY	BOTANICAL NAME	COMMON NAME	QTY.	SIZE	TYPE
AR	ACER RUBRUM	Red Maple	26	2 1/2"-3" Cal	Deciduous Tree, B & B
QC	QUERCUS COCCINEA	Scarlet Oak	26	2 1/2"-3" Cal	Deciduous Tree, B & B
QR	QUERCUS RUBRA	Red Oak	25	2 1/2"-3" Cal	Deciduous Tree, B & B
PA	PICEA ABIES	Norway Spruce	101	5'-6'	Evergreen Tree, B & B
PP	PICEA PUNGENS	Blue Colorado Spruce	99	5'-6'	Evergreen Tree, B & B
JPN	JUNIPERUS PROCUMBENS 'NANA'	Dwarf Jap. Garden Juniper	54	3 Gal	Evergreen Shrub, Cont.
BXV	BUXUS SEMPERVIRENS	Variegated Leaf Boxwood	70	24"	Evergreen Shrub, Cont.
IO	ILEX OPACA	American Holly	108	3 Gal	Evergreen Tree, Cont.
ILV	ILEX VERTICILLATA	Winterberry	102	3 Gal	Evergreen Tree, Cont.

LIGHTING SCHEDULE

455 MAIN STREET - TOWNSHIP OF MANTUA, GLOUCESTER COUNTY, NJ

SYMBOL	QTY	LUMENS	# LAMPS	WATTS	DESCRIPTION
"A"	18	ABSOLUTE	1	50.9	LITHONIA LIGHTING DSX1 LED P1 30K TYPE 2 T2M, MVOLT HOUSE SIDE SHIELD (20' POLE MOUNT)
"B"	24	ABSOLUTE	1	50.9	LITHONIA LIGHTING DSX1 LED P1 30K TYPE 2 T2M, MVOLT (20' BUILDING MOUNT)

LIGHT STATISTICS

DESCRIPTION	Avg	Max	Min
HORIZONTAL FOOTCANDLES	1.2 fc	2.7 fc	0.0 fc

LANDSCAPING & LIGHTING NOTES:

1. SEE THE PROJECT INFORMATION SHEET (SHEET 2) FOR LANDSCAPING NOTES.
2. SEE THE CONSTRUCTION DETAILS PLAN SHEET (SHEET 24) FOR LANDSCAPING & LIGHTING DETAILS.
3. ALL EXPOSED AREAS NOT OCCUPIED WITH IMPROVEMENTS OR MULCH SHALL BE SEEDED AND MULCHED USING THE PERMANENT SEEDING SCHEDULE. REFER TO THE NOTES ON THE SOIL EROSION AND SEDIMENT CONTROL NOTES AND DETAILS (SHEET 20).
4. DECIDUOUS TREES SHALL HAVE A CALIPER OF AT LEAST 2 1/2 INCHES AT PLANTING, AND EVERGREENS SHALL BE AT LEAST FIVE FEET TALL. SHRUBS SHALL BE AT LEAST TWO FEET TALL AT PLANTINGS.
5. ALL LIGHT POSTS SHALL BE PLACED AT LEAST 3 FEET BEHIND THE CURBS OR EDGE OF PAVEMENT.

K2 Consulting Engineers, Inc.
Professional Civil Engineers
Certificate of Authorization #24GA28187400
36 Tanner Street, Suite 100
Haddonfield, NJ 08033
Phone - 856.310.5205
Fax - 856.610.2441
www.K2CE.com

DATE	REVISION	BY

LANDSCAPING AND LIGHTING PLAN
455 MAIN STREET
BLOCK 160 - LOT 13 - TAX MAP SHEET 31
SITUATE IN THE
TOWNSHIP OF MANTUA, GLOUCESTER COUNTY, NEW JERSEY

JOHN W. KORNICK, P.E.
Professional Engineer, New Jersey Lic. No. 24GE04928500

DATE: 06/30/2025
DESIGN BY: WFR
DRAWN BY: WFR
SCALE: 1"=30'
JOB NO.: PD23-129
SHEET 15 OF 27

DWG. NAME: W:\PROJECT FILES\PD23 Projects\PD23-129 - 455 Main Street, Twp of Mantua, Gloucester County\09-AUTOCAD\DESIGN\Ill.dwg

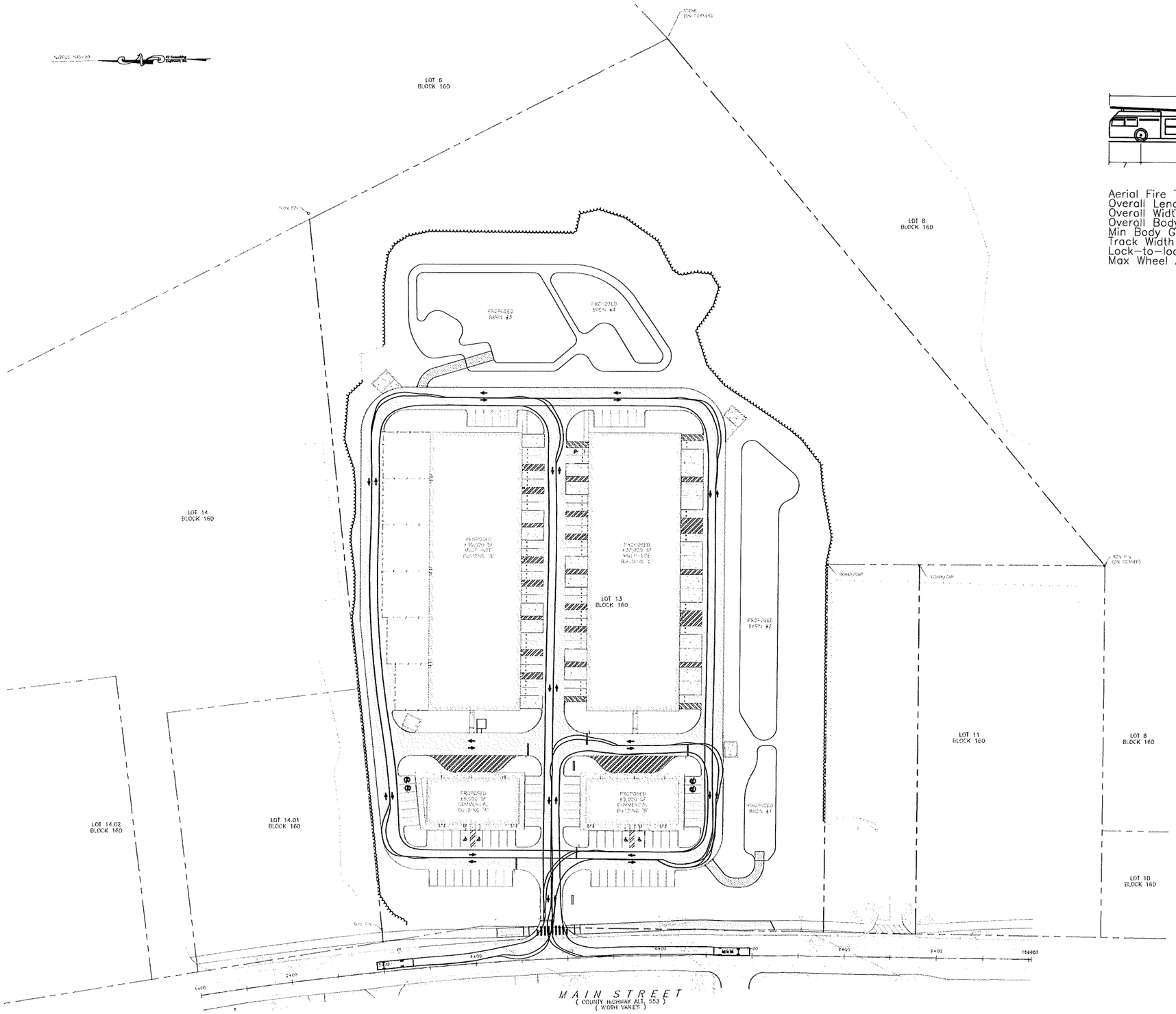

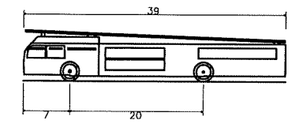

Aerial Fire Truck	
Overall Length	39.000ft
Overall Width	8.167ft
Overall Body Height	7.500ft
Min Body Ground Clearance	0.750ft
Track Width	8.167ft
Lock-to-lock time	5.00s
Max Wheel Angle	45.00°

50 0 50 100
GRAPHIC SCALE IN FEET

DWG. NAME: W:\PROJECT FILES\PD23 Projects\PD23-129 - 455 Main Street, Twp of Mantua, Gloucester County\09-AUTOCAD\DESIGN\ftruck.dwg

K2 Consulting Engineers, Inc.
Professional Civil Engineers
Certificate of Authorization
#24GA28187400
36 Tanner Street, Suite 100
Haddonfield, NJ 08033
Phone - 856.310.5005
Fax - 856.616.2441
www.K2CE.com

DATE	REVISION	BY

VEHICLE CIRCULATION PLAN
455 MAIN STREET
BLOCK 160 - LOT 13 - TAX MAP SHEET 31
SITUATE IN THE
TOWNSHIP OF MANTUA, GLOUCESTER COUNTY, NEW JERSEY

JOHN W. KORNICK, P.E.
Professional Engineer, New Jersey Lic. No. 24GE04928500

DATE:	06/30/2025
DESIGN BY:	WFR
DRAWN BY:	WFR
SCALE:	1"=50'
JOB NO.:	PD23-129
SHEET	16 OF 27

N.J.P.C.S. NAD-83

K2 Consulting Engineers, Inc.

MATCHLINE

SHEET 18

LOT 13
BLOCK 160

LOT 11
BLOCK 160

LOT 8
BLOCK 160

LOT 10
BLOCK 160

HW#2 RIP RAP APRON:
LENGTH=14'
WIDTH=11'
D50=4"
THICKNESS=12"

HW#1 RIP RAP APRON:
LENGTH=17'
WIDTH=21'
D50=9"
THICKNESS=27"

LIMIT OF DISTURBANCE
8.379 ACRES (364,977 SF)

SILT FENCE (TYP)

PROPOSED INLET SEDIMENT FILTER (TYP)

STABILIZED CONSTRUCTION ENTRANCE W/ 30' PAVED TRANSITION AREA (SEE DETAIL)

MAIN STREET
(COUNTY HIGHWAY ALT. 553.)
(WIDTH VARIES)

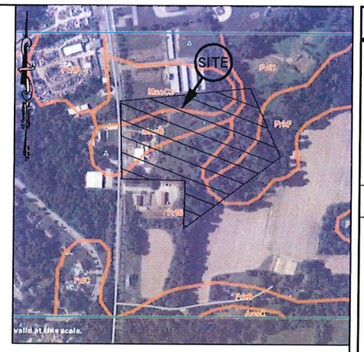

ZONING MAP

NOT TO SCALE

SOILS TYPE

MaoC2 – MARLTON SANDY LOAM, 5 TO 10 PERCENT SLOPES

MaoB – MARLTON SANDY LOAM, 2 TO 5 PERCENT SLOPES

FrfB – FREEHOLD LOAMY SAND, 0 TO 5 PERCENT SLOPES

FrfC – FREEHOLD LOAMY SAND, 5 TO 10 PERCENT SLOPES

FrkF – FREEHOLD SANDY LOAM, 25 TO 40 PERCENT SLOPES

LEGEND

- PROPOSED INLET FILTER
- SILT FENCE
- LIMIT OF DISTURBANCE
- STORM SEWER PIPE
- EXISTING CONTOUR
- PROPOSED CONTOUR

30 0 30 60
GRAPHIC SCALE IN FEET

K2 Consulting Engineers, Inc.
Professional Civil Engineers
Certificate of Authorization
#24GA28187400
36 Tanner Street, Suite 100
Haddonfield, NJ 08033
Phone - 856.310.5205
Fax - 856.616.2441
www.K2CE.com

DATE	REVISION	BY

SOIL EROSION AND SEDIMENT CONTROL PLAN
455 MAIN STREET
BLOCK 160 - LOT 13 - TAX MAP SHEET 31
SITUATE IN THE
TOWNSHIP OF MANTUA, GLOUCESTER COUNTY, NEW JERSEY

JOHN W. KORNICK, P.E.
Professional Engineer, New Jersey Lic. No. 24GE04928500

DATE:	06/30/2025
DESIGN BY:	WFR
DRAWN BY:	WFR
SCALE:	1"=30'
JOB NO.:	PD23-129
SHEET	17 OF 27

DWG. NAME: W:\PROJECT FILES\PD23 Projects\PD23-129 - 455 Main Street, Twp of Mantua, Gloucester County\09-AUTOCAD\DESIGN\tsesc.dwg

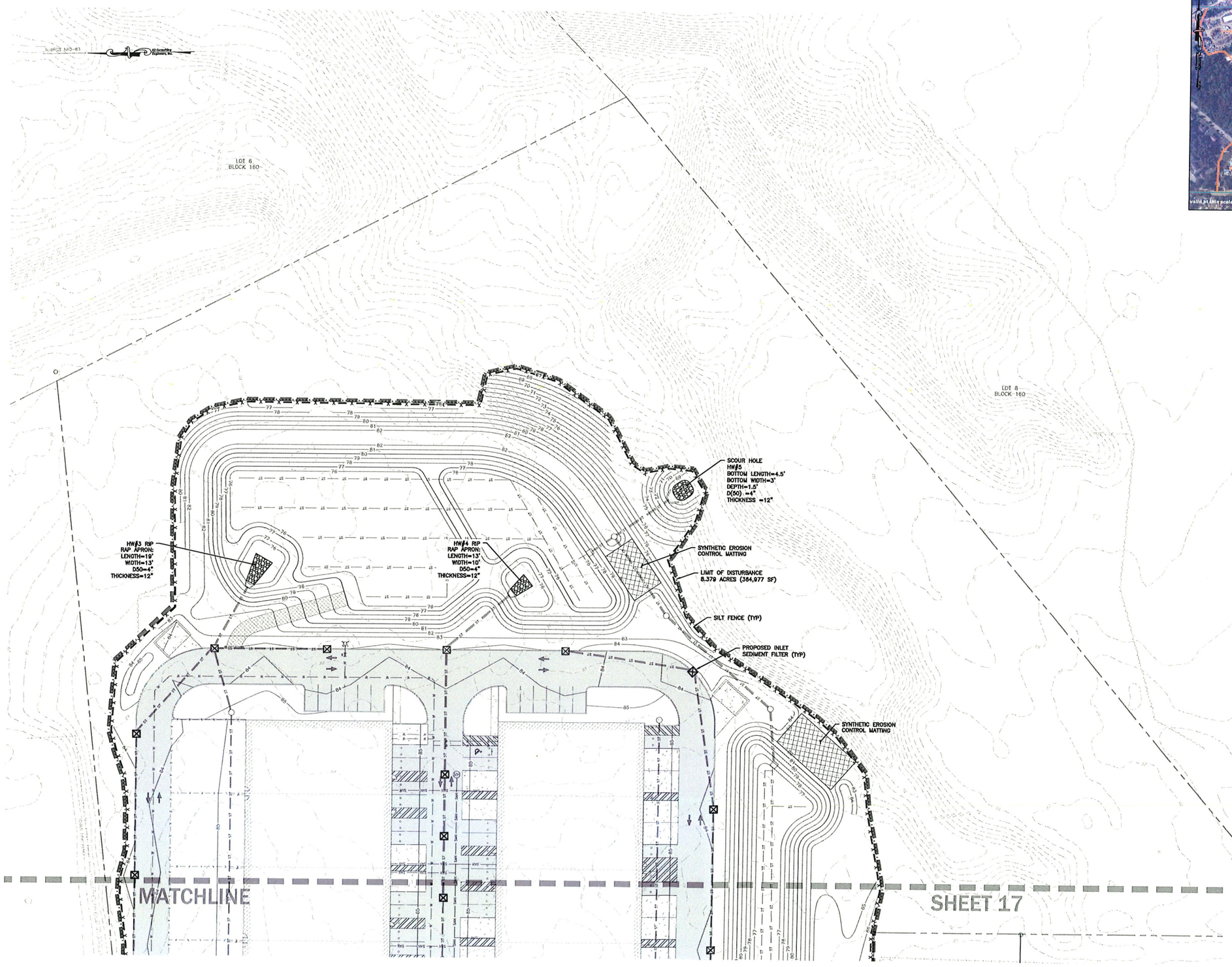

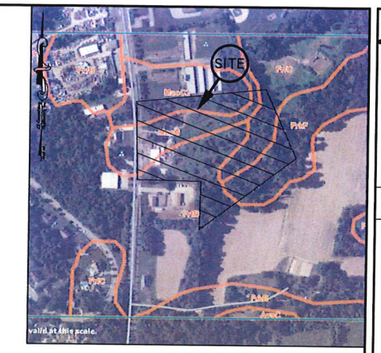

ZONING MAP

NOT TO SCALE

SOILS TYPE

MaoC2 – MARLTON SANDY LOAM, 5 TO 10 PERCENT SLOPES

MaoB – MARLTON SANDY LOAM, 2 TO 5 PERCENT SLOPES

FrfB – FREEHOLD LOAMY SAND, 0 TO 5 PERCENT SLOPES

FrfC – FREEHOLD LOAMY SAND, 5 TO 10 PERCENT SLOPES

FrkF – FREEHOLD SANDY LOAM, 25 TO 40 PERCENT SLOPES

LEGEND

- PROPOSED INLET FILTER
- SILT FENCE
- LIMIT OF DISTURBANCE
- STORM SEWER PIPE
- EXISTING CONTOUR
- PROPOSED CONTOUR

30 0 30 60

GRAPHIC SCALE IN FEET

K2 Consulting Engineers, Inc.
Professional Civil Engineers
Certificate of Authorization
#24GA28187400
36 Tanner Street, Suite 100
Haddonfield, NJ 08033
Phone - 856.310.5205
Fax - 856.616.2441
www.K2CE.com

DATE	REVISION	BY

SOIL EROSION AND SEDIMENT CONTROL PLAN
455 MAIN STREET
BLOCK 160 - LOT 13 - TAX MAP SHEET 31
SITUATE IN THE
TOWNSHIP OF MANTUA, GLOUCESTER COUNTY, NEW JERSEY

JOHN W. KORNICK, P.E.
Professional Engineer, New Jersey Lic. No. 24GE04928500

DATE: 06/30/2025
DESIGN BY: WFR
DRAWN BY: WFR
SCALE: 1"=30'
JOB NO.: PD23-129
SHEET 18 OF 27

DWG. NAME: W:\PROJECT FILES\PD23 Projects\PD23-129 - 455 Main Street, Twp of Mantua, Gloucester County\09-AUTOCAD\DESIGN\tsesc.dwg

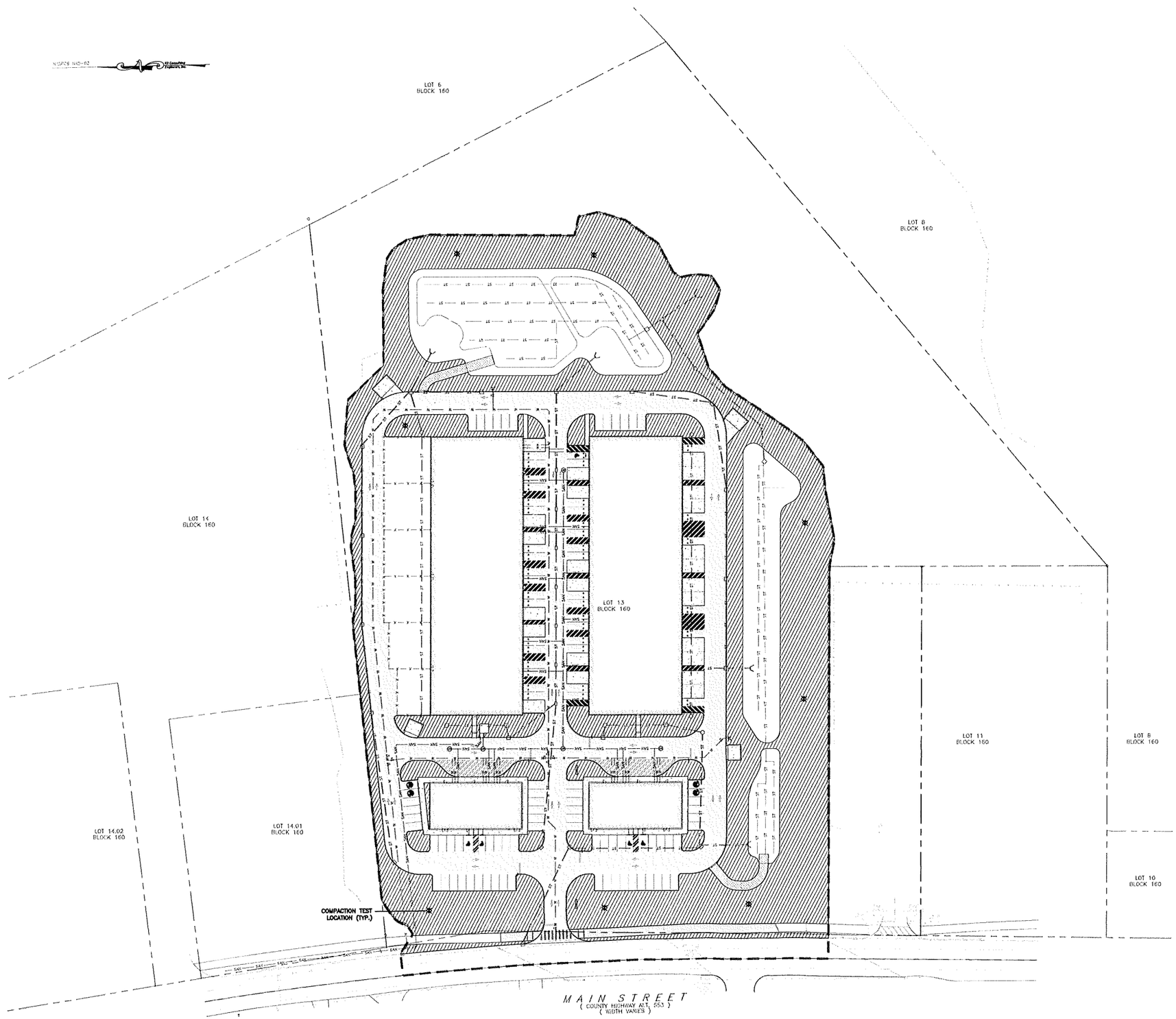

SOIL RESTORATION NOTES REQUIRED ON PLANS
SOIL DE-COMPACTION AND TESTING REQUIREMENTS

SOIL COMPACTION TESTING REQUIREMENTS

1. SUBGRADE SOILS PRIOR TO THE APPLICATION OF TOPSOIL (SEE PERMANENT SEEDING AND STABILIZATION NOTES FOR TOPSOIL REQUIREMENTS) SHALL BE FREE OF EXCESSIVE COMPACTION TO A DEPTH OF 8.0 INCHES TO ENHANCE THE ESTABLISHMENT OF PERMANENT VEGETATIVE COVER.

2. AREAS OF THE SITE WHICH ARE SUBJECT TO COMPACTION TESTING AND/OR MITIGATION ARE GRAPHICALLY DENOTED ON THE CERTIFIES SOIL EROSION CONTROL PLAN. SEE EXAMPLE SITE PLAN AT:HTTP://WWW.NJ.GOV/AGRICULTURE/DIVISIONS/ANR/NRC/NJEROSION.HTML

3. COMPACTION TESTING LOCATIONS ARE DENOTED ON THE PLAN. A COPY OF THE PLAN SHALL BE USED TO MARK LOCATIONS OF TESTS, AND ATTACHED TO THE SOIL COMPACTION MITIGATION FORM AVAILABLE FROM THE LOCAL SOIL CONSERVATION DISTRICT HTTP://WWW.NJ.GOV/AGRICULTURE/DIVISIONS/ANR/NRC/NJEROSION.HTML. THIS FORM MUST BE FILLED OUT AND SUBMITTED PRIOR TO RECEIVING A CERTIFICATE OF COMPLIANCE FROM THE DISTRICT

4. IN THE EVENT THAT TESTING INDICATES COMPACTION IN EXCESS OF THE MAXIMUM THRESHOLDS INDICATED FOR THE SIMPLIFIED TESTING METHODS (SEE DETAILS BELOW),THE CONTRACTOR/OWNER SHALL HAVE THE OPTION TO PERFORM EITHER [1] COMPACTION MITIGATION OVER THE ENTIRE MITIGATION AREA DENOTED ON THE PLAN (EXCLUDING EXEMPT AREAS), OR [2] PERFORM ADDITIONAL, MORE DETAILED TESTING TO ESTABLISH THE LIMITS OF EXCESSIVE COMPACTION WHEREUPON ONLY THE EXCESSIVELY COMPACTED AREAS WOULD REQUIRE COMPACTION MITIGATION. ADDITIONAL DETAILED TESTING SHALL BE PERFORMED BY A TRAINED, LICENSED PROFESSIONAL.

5. IMMEDIATELY PRIOR TO TOPSOIL APPLICATION, THE SUBSOIL SHALL BE EVALUATED FOR COMPACTION IN ACCORDANCE WITH THE STANDARD FOR LAND GRADING.

COMPACTION TESTING METHODS

A. PROBING WIRE TEST (SEE DETAIL)
B. HAND-HELD PENETROMETER TEST (SEE DETAIL)
C. TUBE BULK DENSITY TEST (LICENSED PROFESSIONAL ENGINEER REQUIRED)
D. NUCLEAR DENSITY TEST (LICENSED PROFESSIONAL ENGINEER REQUIRED)

NOTE: ADDITIONAL TESTING METHODS WHICH CONFORM TO ASTM STANDARDS AND SPECIFICATIONS, AND WHICH PRODUCE A DRY WEIGHT, SOIL BULK DENSITY MEASUREMENT MAY BE ALLOWED SUBJECT TO DISTRICT APPROVAL.
SOIL COMPACTION TESTING IS NOT REQUIRED IF/WHEN SUBSOIL COMPACTION REMEDIATION (SCARIFICATION/TILLAGE (6" MINIMUM DEPTH) OR SIMILAR) IS PROPOSED AS PART OF THE SEQUENCE OF CONSTRUCTION

PROCEDURES FOR SOIL COMPACTION MITIGATION
PROCEDURES SHALL BE USED TO MITIGATE EXCESSIVE SOIL COMPACTION PRIOR TO PLACEMENT OF TOPSOIL AND ESTABLISHMENT OF PERMANENT VEGETATIVE COVER. RESTORATION OF COMPACTED SOILS SHALL BE THROUGH DEEP SCARIFICATION/TILLAGE (6" MINIMUM DEPTH) WHERE THERE IS NO DANGER TO UNDERGROUND UTILITIES (CABLES, IRRIGATION SYSTEMS, ETC.). IN THE ALTERNATIVE, ANOTHER METHOD AS SPECIFIED BY A NEW JERSEY LICENSED PROFESSIONAL ENGINEER MAYBE SUBSTITUTED SUBJECT TO DISTRICT APPROVAL.

EFFECTIVE DATE 12/7/2017

PROBING WIRE TEST – 15.5 GA STEEL WIRE (SURVEY FLAG)

NOTE: SOIL SHOULD BE MOIST BUT NOT SATURATED. DO NOT TEST WHEN SOIL IS EXCESSIVELY DRY OR SUBJECT TO FREEZING TEMPERATURES. SLOW, STEADY DOWNWARD PRESSURE USED TO ADVANCE THE WIRE

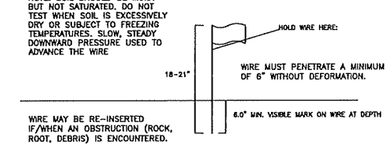

WIRE MAY BE RE-INSERTED IF/WHEN AN OBSTRUCTION (ROCK, ROOT, DEBRIS) IS ENCOUNTERED.

HANDHELD SOIL PENETROMETER TEST

NOTE: SOIL SHOULD BE MOIST BUT NOT SATURATED. DO NOT TEST WHEN SOIL IS EXCESSIVELY DRY OR SUBJECT TO FREEZING TEMPERATURES. SLOW, STEADY DOWNWARD PRESSURE USED TO ADVANCE THE PROBE. PROBE MUST PENETRATE AT LEAST 6" WITH LESS THAN 300 PSI READING ON THE GAGE

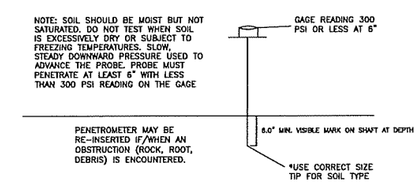

PENETROMETER MAY BE RE-INSERTED IF/WHEN AN OBSTRUCTION (ROCK, ROOT, DEBRIS) IS ENCOUNTERED.

LEGEND

AREA SUBJECT TO COMPACTION TESTING (113,851 SF OR 2.61 AC)

COMPACTION TEST LOCATION

LIMIT OF DISTURBANCE

50 0 50 100
GRAPHIC SCALE IN FEET

K2 Consulting Engineers, Inc.
Professional Civil Engineers
Certificate of Authorization #24GA28187400
36 Tanner Street, Suite 100
Haddonfield, NJ 08033
Phone - 856.310.5205
Fax - 856.616.2441
www.K2CE.com

DATE	REVISION	BY

SOIL COMPACTION MITIGATION PLAN
455 MAIN STREET
BLOCK 160 - LOT 13 - TAX MAP SHEET 31
SITUATE IN THE
TOWNSHIP OF MANTUA, GLOUCESTER COUNTY, NEW JERSEY

JOHN W. KORNICK, P.E.
Professional Engineer, New Jersey Lic. No. 24GE04928500

DATE:	06/30/2025
DESIGN BY:	WFR
DRAWN BY:	WFR
SCALE:	1"=50'
JOB NO.:	PD23-129
SHEET	19 OF 27

DWG. NAME: W:\PROJECT FILES\PD23 Projects\PD23-129 - 455 Main Street, Twp of Mantua, Gloucester County\09-AUTOCAD\DESIGN\tsesc.dwg

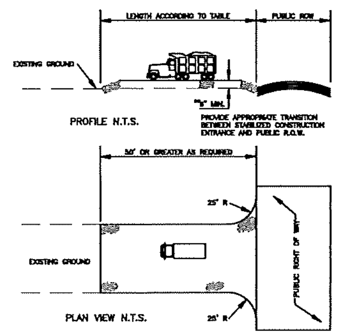

NOTE:

THE ENTRANCE SHALL BE MAINTAINED IN A CONDITION WHICH WILL PREVENT TRACKING OR FLOWING OF SEDIMENT ONTO ROADWAYS. THIS MAY REQUIRE PERIODIC TOP DRESSING WITH ADDITIONAL STONE OR ADDITIONAL LENGTH AS CONDITIONS DEMAND AND REPAIR AND/OR CLEANOUT OF ANY MEASURES USED TO TRAP SEDIMENT. ALL SEDIMENT SPILLED, DROPPED, WASHED, OR TRACKED ONTO ROADWAYS (PUBLIC OR PRIVATE) OR OTHER IMPERVIOUS SURFACES MUST BE REMOVED IMMEDIATELY.

WHERE ACCUMULATION OF DUST/SEDIMENT IS INADEQUATELY CLEANED OR REMOVED BY CONVENTIONAL METHODS, A POWER BROOM OR STREET SWEEPER WILL BE REQUIRED TO CLEAN PAVED OR IMPERVIOUS SURFACES. ALL OTHER ACCESS POINTS WHICH ARE NOT STABILIZED SHALL BE BLOCKED OFF.

PERCENT SLOPE OF ROADWAY	LENGTH OF STONE REQUIRED	
	COURSE GRAINED SOILS	FINE GRAINED SOILS
0 TO 2%	50 FT	100 FT
2 TO 5%	100 FT	200 FT
> 5%	ENTIRE SURFACE STABILIZED WITH FABC BASE COURSE	

*AS PRESCRIBED BY GOVERNING AUTHORITY
**THICKNESS SHOWN FOR STONE CONSTRUCTION ENTRANCE ONLY
NOTE: INDIVIDUAL LOT ACCESS POINTS MAY REQUIRE STABILIZATION

STABILIZED CONSTRUCTION ENTRANCE

N.T.S.

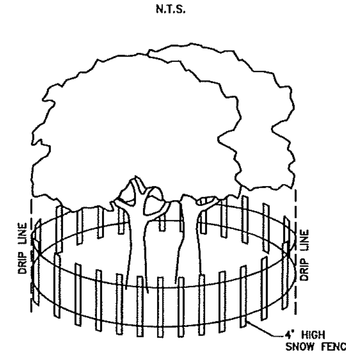

NOTES:
1. TREE PROTECTION SHALL BE IN PLACE PRIOR TO THE START OF CONSTRUCTION.
2. NO CONSTRUCTION VEHICLES, STORAGE OR ACTIVITIES TO OCCUR WITH IN THE TREE'S PROTECTION ROOT ZONE.
3. ALL GRADING ACTIVITIES WITH IN THE TREES PROTECTED ROOT ZONE MUST BE ARCHIVED BY RAKING, NO MACHINERY TO PERFORM THE GRADING ACTIVITIES.
4. A MAXIMUM OF 6" TO 8" OF FILL CAN BE UTILIZED WITH IN THE TREE PROTECTION ZONE ONLY IF THE FOLLOWING METHODS ARE UTILIZED:
   POURUS FILL CAN BE MADE BY MIXING ONE PART LOAM, ONE PART COARSE SAND.

TREE PROTECTION DETAIL

N.T.S.

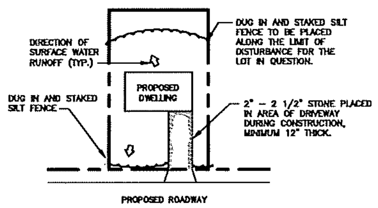

NOTES:
1. RESPONSIBILITY FOR PLACEMENT AND MAINTENANCE OF SOIL EROSION CONTROL MEASURES ON INDIVIDUAL LOTS BELONGS TO THE PROPERTY OWNER.
2. RESPONSIBILITY FOR SUCH CONTROL MEASURES SHALL APPLY TO SUBSEQUENT OWNERS IF TITLE IS CONVEYED.

TYPICAL LOT DETAIL DURING CONSTRUCTION OR LOT AREA DISTURBANCE

N.T.S.

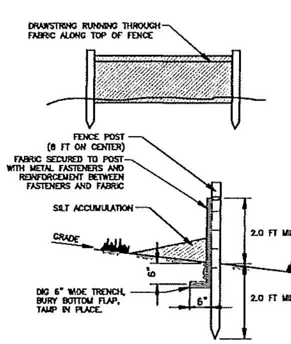

SILT FENCE

N.T.S.

C. Requirements for silt fence

1. Fence posts shall be spaced 8 feet center-to-center or closer. They shall extend at least 2 feet into the ground and extend at least 2 feet above ground (Fig. 23-2). Posts shall be constructed of hardwood with a minimum diameter thickness of 1 ½ inches.
2. "Super" silt fence - A metal fence with 6 inch or smaller mesh openings and at least 2 feet high may be utilized, fastened to the fence posts, to provide reinforcement and support to the geotextile fabric. Posts may be spaced less than 8 feet on center and may be constructed of heavier wood or metal as needed to withstand heavier sediment loading. This practice is appropriate where space for other practices is limited and heavy sediment loading is expected. "Super" silt fence is not to be used in place of properly designed diversions (pg. 15-1) which may be needed to control surface runoff rates and velocities.
3. A geotextile fabric, recommended for such use by the manufacturer, shall be buried at least 6 inches deep in the ground. The fabric shall extend at least 2 feet above the ground. The fabric must be securely fastened to the posts using a system consisting of metal fasteners (nails or staples) and a high strength reinforcement material (nylon webbing, grommets, washers etc.) placed between the fastener and the geotextile fabric. The fastening system shall resist tearing away from the post. The fabric shall incorporate a drawstring in the top portion of the fence for added strength.

STANDARD NOTES FOR SILT FENCE MAINTENANCE

Where a stabilized construction exit traverses between two buildings, it shall be stoned the entire length of the right-of-way. Mountable stone berms placed across the width of the exit may also be required at the transition point between paved and non-paved areas to trap sediments which are carried by stormwater flowing along the curbline.

Individual lot entrance and egress- After interior roadways are paved, individual lot ingress/egress points may require a stabilized construction entrance consisting of no. 3 stone (1" to 2") to prevent or minimize tracking of sediments. Width of the stone ingress/egress shall be equal to lot entrance width and shall be a minimum of ten feet in length.

Tire washing - If space is limited, vehicle tires may be washed with clean water before entering a paved area. A wash station must be located such that wash water will not flow onto paved roadways or into unprotected storm drainage systems.

When the construction access exits onto a major roadway, a paved transition area may be installed between the major roadway and the stoned entrance to prevent loose stones from being transported out onto the roadway by heavy equipment entering or leaving the site.

STANDARD NOTES FOR CONSTRUCTION ENTRANCE MAINTENANCE

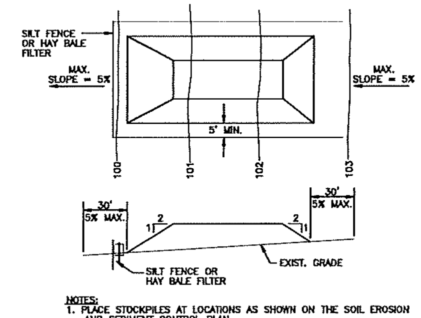

NOTES:
1. PLACE STOCKPILES AT LOCATIONS AS SHOWN ON THE SOIL EROSION AND SEDIMENT CONTROL PLAN.
2. ALL SIDE SLOPES SHALL BE 3 TO 1 OR FLATTER.
3. STOCKPILE SHALL RECEIVE A VEGETATIVE COVER IN ACCORDANCE WITH MINIMUM STABILIZATION REQ.
4. SILT FENCE OR HAY BALE FILTER SHALL BE INSTALLED AS DETAILED HEREON.

TOPSOIL STOCKPILE

N.T.S.

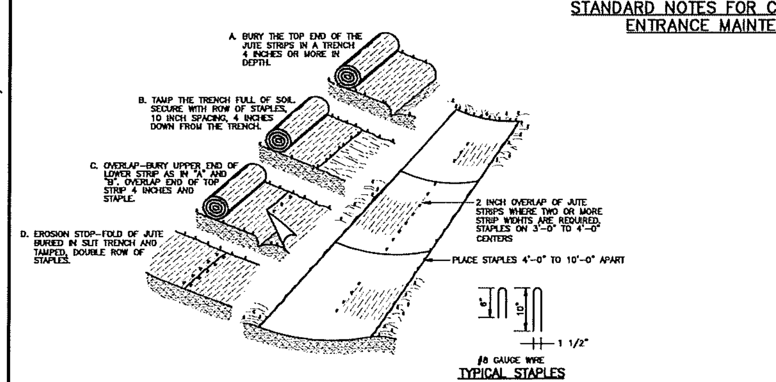

SOIL STABILIZATION MATTING

N.T.S.

STANDARDS FOR TOPSOILING – METHODS AND MATERIALS

1. MATERIALS
A. TOPSOIL SHOULD BE FRIABLE1, LOAMY2, FREE OF DEBRIS, OBJECTIONABLE WEEDS AND STONES, AND CONTAIN NO TOXIC SUBSTANCE OR ADVERSE CHEMICAL OR PHYSICAL CONDITION THAT MAY BE HARMFUL TO PLANT GROWTH. SOLUBLE SALTS SHOULD NOT BE EXCESSIVE (CONDUCTIVITY LESS THAN 0.5 MILLIMHOS PER CENTIMETER. MORE THAN 0.5 MILLIMHOS MAY DESICCATE SEEDLINGS AND ADVERSELY IMPACT GROWTH). TOPSOIL MUST HAVE AN ORGANIC MATTER CONTENT NO LESS THAN THAT SHOWN IN TABLE 8.13 BELOW. ORGANIC MATTER CONTENT MAY BE RAISED IF NECESSARY BY THE ADDITION AND MIXING OF ADDITIVES WHICH CONFORM TO THE FOLLOWING SPECIFICATIONS:
a. NO UNDIGESTED (RAW) MATERIAL GREATER THAN 10% BY VOLUME.
b. NO TRASH
c. NO ROCKS OR STONES LARGER THAN 0.5"
d. NO RAW OR 'FRESH' MANURE (GREEN OR OTHERWISE). COMPOST MUST BE FULLY DECOMPOSED.
e. QUALITY OF ORGANIC MATTER (COMPOST) MUST BE VERIFIED THOUGH CERTIFICATION FROM THE SUPPLIER IN ACCORDANCE WITH NJ DEP SOLID WASTE REQUIREMENTS AT NJAC 7:26A–4.5(B)
B. ORGANIC MATTER SHALL BE BLENDED WITH TOPSOIL BY ANY OF THE FOLLOWING METHODS:
a. BLENDING IN BULK EITHER ON SITE OR BY THE SUPPLIER. SUPPLIER IS TO PROVIDE WRITTEN VERIFICATION OF QUALITY AND AMOUNT OF ORGANIC MATERIAL USED IN BLENDING INCLUDING FINAL OM CONTENT IN PERCENT BY WEIGHT IN ACCORDANCE WITH ITEM A(E) ABOVE.
b. SPREAD AS A SECOND LAYER OVER TOPSOIL WHICH HAS BEEN PREVIOUSLY PLACED, AND THEN BLENDED WITH A DISK HARROW, TRACTOR MOUNTED TILLER OR SIMILAR EQUIPMENT TO UNIFORMLY INCORPORATE ORGANIC MATTER (SEE ITEM C BELOW TO DETERMINE PROPER AMOUNT OF COMPOST TO BE SPREAD PER ACRE FOR INCORPORATION) INTO TOPSOIL.
c. SMALL AREAS MAY HAVE ORGANIC MATTER INCORPORATED BY HAND OR WITH A ROTOR TILLER.
d. SUBSEQUENT COMPACTION REMEDIATION BY RIPPING MAY BE REQUIRED IN ACCORDANCE WITH THE STANDARD FOR LAND GRADING (19–1)
C. THE QUANTITY OF ORGANIC MATTER TO BE ADDED SHALL BE DETERMINED BY THE FOLLOWING FORMULA:
SOM = EXISTING SOIL ORGANIC MATTER FRACTION (EXPRESSED AS DECIMAL)
TOM = TARGET OM VALUE (FROM TABLE, EXPRESSED AS DECIMAL FRACTION)
COM = COMPOST ORGANIC MATTER FRACTION
CV = COMPOST VOLUME REQUIRED (CY/AC)
CV = 2375* X [(TOM – SOM)/(COM)]
EXAMPLE: SOM = 1.5%
TOM = 2.5%
COM = 45%
CV = 2376 X [(0.025–0.0150/0.45)]
CV = 52.8 CUBIC YARDS/ACRE

TABLE 8.1
TARGET ORGANIC MATTER (TOM) CONTENT BY SOIL TEXTURE

SOIL TEXTURAL CLASS	MINIMUM SOIL ORGANIC MATTER (% BY MASS)
SAND AND LOAMY SAND	2.0
SANDY LOAM	2.5
LOAM	4.0
SILT LOAM, ALL CLAY LOAMS, AND CLAY	5.0

D. TOPSOIL SUBSTITUTE IS A SOIL MATERIAL WHICH MAY HAVE BEEN AMENDED WITH SAND, SILT, CLAY, ORGANIC MATTER, FERTILIZER OR LIME AND HAS THE APPEARANCE OF TOPSOIL. TOPSOIL SUBSTITUTES MAY BE UTILIZED ON SITES WITH INSUFFICIENT TOPSOIL FOR ESTABLISHING PERMANENT VEGETATION. ALL TOPSOIL SUBSTITUTE MATERIALS SHALL MEET THE REQUIREMENTS OF TOPSOIL NOTED ABOVE. SOIL TESTS SHALL BE PERFORMED TO DETERMINE THE COMPONENTS OF SAND, SILT, CLAY, ORGANIC MATTER, SOLUBLE SALTS AND PH LEVEL.

E. TOPSOIL AND ORGANIC MATTER CRITERIA FOR STABILIZATION IN THE PINELANDS NATIONAL RESERVE SHALL CONFORM TO THE REQUIREMENTS ESTABLISHED IN THE STANDARD FOR PERMANENT VEGETATIVE STABILIZATION.

2. STRIPPING AND STOCKPILING
A. FIELD EXPLORATION SHOULD BE MADE TO DETERMINE WHETHER QUANTITY AND OR QUALITY OF SURFACE SOIL JUSTIFIES STRIPPING.
B. STRIPPING SHOULD BE CONFINED TO THE IMMEDIATE CONSTRUCTION AREA.
C. WHERE FEASIBLE, LIME MAY BE APPLIED BEFORE STRIPPING AT A RATE DETERMINED BY SOIL TESTS TO BRING THE SOIL PH TO APPROXIMATELY 6.5. IN LIEU OF SOIL TESTS, SEE LIME RATE GUIDE IN SEEDBED PREPARATION FOR PERMANENT VEGETATIVE COVER FOR SOIL STABILIZATION.
D. A 4–6 INCH STRIPPING DEPTH IS COMMON, BUT MAY VARY DEPENDING ON THE PARTICULAR SOIL.
E. STOCKPILES OF TOPSOIL SHOULD BE SITUATED SO AS NOT TO OBSTRUCT NATURAL DRAINAGE OR CAUSE OFF–SITE ENVIRONMENTAL DAMAGE.
F. STOCKPILES SHOULD BE VEGETATED IN ACCORDANCE WITH STANDARDS PREVIOUSLY DESCRIBED HEREIN; SEE STANDARDS FOR PERMANENT OR TEMPORARY VEGETATIVE COVER FOR SOIL STABILIZATION. WEEDS SHOULD NOT BE ALLOWED TO GROW ON STOCKPILES.

3. SITE PREPARATION
A. GRADE AT THE ONSET OF THE OPTIMAL SEEDING PERIOD SO AS TO MINIMIZE THE DURATION AND AREA OF EXPOSURE OF DISTURBED SOIL TO EROSION. IMMEDIATELY PROCEED TO ESTABLISH VEGETATIVE COVER IN ACCORDANCE WITH THE SPECIFIED SEED MIXTURE. TIME IS OF THE ESSENCE.
B. GRADE AS NEEDED AND FEASIBLE TO PERMIT THE USE OF CONVENTIONAL EQUIPMENT FOR SEEDBED PREPARATION, SEEDING, MULCH APPLICATION AND ANCHORING, AND MAINTENANCE.
SEE THE STANDARD FOR LAND GRADING.
C. AS GUIDANCE FOR IDEAL CONDITIONS, SUBSOIL SHOULD BE TESTED FOR LIME REQUIREMENT. LIMESTONE, IF NEEDED, SHOULD BE APPLIED TO BRING SOIL TO A PH OF APPROXIMATELY 6.5 AND INCORPORATED INTO THE SOIL AS NEARLY AS PRACTICAL TO A DEPTH OF 4 INCHES.
D. EMPLOY NEEDED EROSION CONTROL PRACTICES SUCH AS DIVERSIONS, GRADE STABILIZATION STRUCTURES, CHANNEL STABILIZATION MEASURES, SEDIMENTATION BASINS, AND WATERWAYS.

4. APPLYING TOPSOIL
A. TOPSOIL SHOULD BE HANDLED ONLY WHEN IT IS DRY ENOUGH TO WORK WITHOUT DAMAGING SOIL STRUCTURE; I.E., LESS THAN FIELD CAPACITY (SEE GLOSSARY).
B. A UNIFORM APPLICATION TO A DEPTH OF 6 INCHES (UNSETTLED) IS REQUIRED. SOILS WITH A PH OF 4.0 OR LESS OR CONTAINING IRON SULFIDE SHALL BE COVERED WITH A MINIMUM DEPTH OF 12 INCHES OF TOPSOIL HAVING A PH OF 5.0 OR MORE, IN ACCORDANCE WITH THE STANDARD FOR MANAGEMENT OF HIGH ACID PRODUCING SOIL.
C. TOPSOIL SHOULD BE FINISH GRADED WITH LOW GROUND PRESSURE EQUIPMENT OR BY HAND WHEN PRACTICAL AND FEASIBLE TO REDUCE THE POTENTIAL FOR RE–COMPACTING THE SUBSOIL.

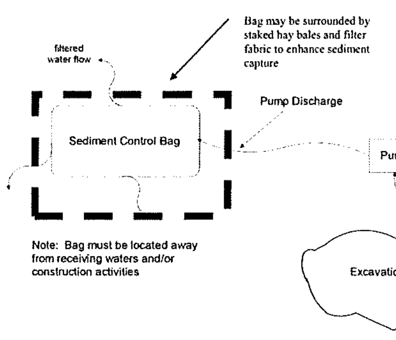

Bags must be disposed of according to manufacturer's instructions. Bags may not be reused.

3. Sediment Tank / Silt Control Bags are containers through which sediment laden water is pumped to trap and retain the sediment. A sediment tank or a silt control bag is to be used on sites were excavations are deep, and space is limited and where direct discharge of sediment laden water to stream and storm drainage systems is to be avoided.

Construction Specifications

A. Location. Containers (tanks or bags) shall be located for ease of clean-out and disposal of the trapped sediment and to minimize interference with construction activities and pedestrian traffic. Bags shall not be place directly into receiving waters.

B. Tank size. The following formula should be used in determining the storage volume of the tank: 1 cubic foot of storage for each gallon per minute of pump discharge capacity. Typical tank configuration is shown on Detail 14-3. Tanks may be connected in series to increase effectiveness.

C. Tanks consist of two concentric circular pipes (CMP), attached to a watertight baseplate. The inner CMP is perforated with 1" holes on 6" centers and is wrapped with geotextile and hardware cloth. Pumped water is discharged into the inner CMP where it flows through the geotextile into the space between the two CMP=s. A discharge line is attached to the outer CMP and draws filtered water from the annulus between the two concentric CMP=s. The discharge line may be connected to another tank where it drains to the inner CMP of the second tank. This series connection may be continued indefinitely.

D. Sediment Control Bags must be located away from receiving waters and disposed of according to manufacturer's instructions. See Detail 14-4. Bags may be combined with temporary filters (item 4, following) for enhanced filtration.

SEDIMENT CONTROL BAG FOR DEWATERING DETAIL

N.T.S.

SEEDING SCHEDULE

1. TEMPORARY SEEDING SHALL CONSIST OF SPRING OATS APPLIED AT A RATE OF 2.0 LBS. PER 1,000 S.F. OR GRAIN RYE APPLIED AT A RATE OF 2.4 LBS. PER 1,000 S.F.. TEMPORARY SEEDING TO BE MAINTAINED UNTIL DISTURBED AREAS ARE PERMANENTLY STABILIZED WITH PERMANENT SEEDING. IF ANY SERIOUS EROSION PROBLEM OCCURS, THE ERODED AREAS SHALL BE REPAIRED AND STABILIZED WITH A MULCH AS INDICATED IN NOTE 7.
2. PERMANENT SEEDING SHALL CONSIST OF MIXTURE NO. 15 AS STANDARDS FOR SOIL EROSION AND SEDIMENT SPECIFIED IN THE IN NEW JERSEY OR APPROVED EQUAL – OPTIMUM SEEDING CONTROL DATES ARE BETWEEN FEBRUARY 15 AND APRIL 30 AND BETWEEN AUGUST 15 AND OCTOBER 30:
   HARD FESCUE @ 2.7#/1000 S.F.
   PERENNIAL RYEGRASS @ 0.7#/1000 S.F.
   KENTUCKY BLUEGRASS (BLEND) @ 0.9#/1000 S.F.
3. SLOPED AREAS TO BE COVERED WITH MULCH AS INDICATED IN NOTE 7.
4. TEMPORARY & PERMANENT SEEDBED PREPARATION
   APPLY GROUND LIMESTONE AND FERTILIZER ACCORDING TO SOIL TEST RECOMMENDATIONS SUCH AS OFFERED BY RUTGERS COOPERATIVE EXTENSION. SOIL SAMPLE MAILERS ARE AVAILABLE FROM THE LOCAL RUTGERS COOPERATIVE EXTENSION OFFICES. FERTILIZER SHALL BE APPLIED AT THE RATE OF 500 POUNDS PER ACRE OR 11 POUNDS PER 1,000 SQUARE FEET OF 10–20–10 OR EQUIVALENT WITH 50%%% WATER INSOLUBLE NITROGEN UNLESS A SOIL TEST INDICATES OTHERWISE. APPLY LIMESTONE AT THE RATE OF 2 TONS/ACRE UNLESS SOIL TESTING INDICATES OTHERWISE.
5. IF SEASON PREVENTS THE ESTABLISHMENT OF A TEMPORARY OR PERMANENT SEEDING, EXPOSED AREAS TO BE STABILIZED WITH MULCH AS INDICATED IN NOTE 7.
6. MULCH TO CONSIST OF SMALL GRAIN STRAW OR SALT HAY ANCHORED WITH A WOOD AND FIBER MULCH BINDER OR AN APPROVED EQUAL IN ACCORDANCE WITH THE STANDARDS FOR SOIL EROSION AND SEDIMENT CONTROL.
7. ALL SEEDED AREAS SHALL BE MULCHED. MULCH SHALL CONSIST OF SMALL GRAIN STRAW OR SALT HAY ANCHORED WITH A WOOD AND FIBRE MULCH BINDER, LIQUID MULCH BINDER, OR AN APPROVED EQUAL AT A RATE OF 70–90 LBS. PER 1000 SF.

DUST CONTROL NOTE

TO CONTROL DUST FROM EXPOSED SOIL SURFACES, REDUCE ON AND OFF SITE DAMAGE AND HEALTH HAZARDS, AND IMPROVE TRAFFIC SAFETY, THE SITE SHALL BE SPRINKLED UNTIL THE SURFACE IS WET.

MULCHING

MULCHING IS REQUIRED ON ALL SEEDING. MULCH WILL INSURE AGAINST EROSION BEFORE GRASS IS ESTABLISHED AND WILL PROMOTE FASTER AND EARLIER ESTABLISHMENT. THE EXISTENCE OF VEGETATION SUFFICIENT TO CONTROL SOIL EROSION SHALL BE DEEMED IN COMPLIANCE WITH THIS MULCHING REQUIREMENT.

A. STRAW OR HAY – UNROTTED SMALL GRAIN STRAW OR HAY FREE OF SEEDS, TO BE APPLIED AT THE RATE OF 1–1/2 TO 2 TONS PER ACRE (70 TO 90 POUNDS PER 1,000 SQUARE FEET), EXCEPT THAT WHERE A CRIMPER IS USED INSTEAD OF A LIQUID MULCH BINDER (TACKIFYING OR ADHESIVE AGENT), THE RATE OF APPLICATION IS 3 TONS PER ACRE. MULCH CHOPPER–BLOWERS MUST NOT GRIND THE MULCH. HAY MULCH IS NOT RECOMMENDED FOR ESTABLISHING FINE TURF OR LAWNS DUE TO THE PRESENCE OF WEED SEED. THE APPROVED RATES ABOVE HAVE BEEN MET WHEN THE MULCH COVERS THE GROUND COMPLETELY UPON VISUAL INSPECTION, I.E. THE INSPECTOR CANNOT SEE THE GROUND BELOW THE MULCH.

APPLICATION – SPREAD MULCH UNIFORMLY BY HAND OR MECHANICALLY SO THAT APPROXIMATELY 85% OF THE SOIL SURFACE WILL BE COVERED. FOR UNIFORM DISTRIBUTION OF HAND SPREAD MULCH, DIVIDE AREA INTO APPROXIMATELY 1,000 SQUARE FEET SECTIONS AND DISTRIBUTE 70 TO 90 POUNDS WITHIN EACH SECTION.

ANCHORING – SHALL BE ACCOMPLISHED IMMEDIATELY AFTER PLACEMENT TO MINIMIZE LOSS BY WIND OR WATER. THIS MAY BE DONE BY ONE OF THE FOLLOWING METHODS, DEEPENING UPON THE SIZE OF THE AREA, STEEPNESS OF SLOPES AND COSTS.

I. PEG AND TWINE – DRIVE 8 TO 10 INCH WOODEN STAKES TO WITHIN 2 TO 3 INCHES OF THE SOIL SURFACE EVERY 4 FEET IN ALL DIRECTIONS. STAKES MAY BE DRIVEN BEFORE OR AFTER APPLYING MULCH. SECURE MULCH TO SOIL SURFACE BY STRETCHING TWINE BETWEEN PEGS IN A CRISS–CROSS AND A SQUARE PATTERN. SECURE TWINE AROUND EACH PEG WITH TWO OR MORE ROUND TURNS.

II. MULCH NETTINGS – STAPLE PAPER, JUTE, COTTON, OR PLASTIC NETTINGS TO THE SOIL SURFACE. USE A DEGRADABLE NETTING IN AREAS TO BE MOWED.

III. CRIMPER (MULCH ANCHORING COULTER TOOL) – A TRACTOR–DRAWN IMPLEMENT, SOMEWHAT LIKE A DISC–HARROW, SPECIALLY DESIGNED TO PUSH OR CUT SOME OF THE BROADCAST LONG FIBER MULCH 3 TO 4 INCHES INTO THE SOIL SO AS TO ANCHOR IT AND LEAVE PART STANDING UPRIGHT. THIS TECHNIQUE IS LIMITED TO AREAS TRAVERSABLE BY A TRACTOR, WHICH MUST OPERATE ON THE CONTOUR OF SLOPES. STRAW MULCH RATE MUST BE 3 TONS PER ACRES. NO TACKIFYING OR ADHESIVE IS REQUIRED.

IV. LIQUID MULCH BINDERS – MAY BE USED TO ANCHOR HAY OR STRAW MULCH

APPLICATIONS SHOULD BE HEAVIER AT EDGES WHERE WIND MAY CATCH THE MULCH, VALLEYS AND AT CRESTS OF BANKS. THE REMAINDER OF THE AREAS SHOULD BE UNIFORM IN APPEARANCE.

USE ON OF THE FOLLOWING:

ORGANIC AND VEGETABLE BASED BINDERS – NATURALLY OCCURRING, POWDER BASED, HYDROPHILIC MATERIALS WHEN MIXED WITH WATER FORMULATES A GEL AND WHEN APPLIED TO MULCH UNDER SATISFACTORY CURING CONDITIONS WILL FORM MEMBRANE NETWORKS OF INSOLUBLE POLYMERS. THE VEGETABLE GEL SHALL BE PHYSIOLOGICALLY HARMLESS AND NOT RESULT IN A PHYTOTOXIC EFFECT OR IMPEDE GROWTH OF TURF GRASS. USE AT RATES AND WEATHER CONDITIONS AS RECOMMENDED BY THE MANUFACTURER TO ANCHOR MULCH MATERIALS. MANY NEW PRODUCTS ARE AVAILABLE SOME OF WHICH MAY NEED FURTHER EVALUATION FOR USE IN NEW JERSEY.

SYNTHETIC BINDERS – HIGH POLYMER SYNTHETIC EMULSION, MISCIBLE WITH WATER WHEN DILUTED AND FOLLOWING APPLICATION TO MULCH, DRYING AND CURING SHALL NO LONGER BE SOLUBLE OR DISPERSIBLE IN WATER. IT SHALL BE APPLIED AT RATES RECOMMENDED BY THE MANUFACTURER AND REMAIN TACKY UNTIL GERMINATION OF GRASS.

NOTE–ALL NAMES GIVEN ABOVE ARE REGISTERED TRADE NAMES. THIS DOES NOT CONSTITUTE A RECOMMENDATION OF THESE PRODUCTS TO THE EXCLUSION OF THE OTHER PRODUCTS.

WOOD FIBER– OR PAPER–FIBER MULCH – SHALL BE MADE FROM WOOD, PLANT FIBERS OR PAPER CONTAINING NO GROWTH OR GERMINATIONS INHIBITING MATERIALS, USED AT THE RATE OF 1,500 POUNDS PER ACRE (OR AS RECOMMENDED BY THE PRODUCT MANUFACTURER) AND MAY BE APPLIED BY A HYDROSEEDER. MULCH SHALL NOT BE MIXED IN THE TANK WITH SEED. USE IS LIMITED TO FLATTER SLOPES AND DURING OPTIMUM SEEDING PERIODS IN SPRING AND FALL.

PELLETIZED MULCH – COMPRESSED AND EXTRUDED PAPER AND/OR WOOD FIBER PRODUCT, WHICH MAY CONTAIN CO–POLYMERS, TACKIFIERS, FERTILIZERS AND COLORING AGENTS. THE DRY PELLETS, WHEN APPLIED TO A SEEDED AREA AND WATERED, FORM A MULCH MAT. PELLETIZED MULCH SHALL BE APPLIED IN ACCORDANCE WITH THE MANUFACTURERS RECOMMENDATIONS. MULCH MAY BE APPLIED BY HAND OR MECHANICAL SPREADER AT A RATE OF 60–75 POUNDS/1,000 SQUARE FEET AND ACTIVATED WITH .2 TO 0.4 INCHES OF WATER. THIS MATERIAL HAS BEEN FOUND TO BE BENEFICIAL FOR USE ON SMALL LAWN OR RENOVATIONS AREAS, SEEDED ARES WHERE WEED–SSED FREE MULCH IS DESIRED OR ON SITES WHERE STRAW MULCH AND TACKIFIER AGENT ARE NOT PRACTICAL OR DESIRABLE. APPLYING THE FULL 0.2 TO 0.4 INCHES OF WATER AFTER SPREADING PELLETIZED MULCH ON THE SEED BED IS EXTREMELY IMPORTANT FOR SUFFICIENT ACTIVATION AND EXPANSION OF THE MULCH TO PROVIDE SOIL COVERAGE.

ACID SOILS NOTES

IN ORDER TO PROVIDE SUITABLE CONDITIONS FOR GROWTH AND VEGETATION AND TO PREVENT THE ACIDIFYING OF DRAINAGE WATER IN THOSE AREAS UNDERLAIN WITH ACID FORMATIONS WITH A pH BELOW 4.0 THE FOLLOWING REQUIREMENT SHALL BE MET:

1. LIMIT THE EXCAVATION AREA AND EXPOSURE TIME WHEN HIGH ACID PRODUCING SOILS ARE ENCOUNTERED.
2. TOPSOIL STRIPPED FROM THE SITE SHALL BE STORED SEPARATELY FROM HIGH ACID PRODUCING SOILS.
3. STOCKPILES OF HIGH ACID PRODUCING SOIL SHOULD BE LOCATED ON LEVEL LAND TO MINIMIZE ITS MOVEMENT, ESPECIALLY WHEN THIS MATERIAL HAS A HIGH CLAY CONTENT.
4. TEMPORARILY STOCKPILED HIGH ACID PRODUCING SOIL MATERIAL TO BE EXPOSED MORE THAN 30 DAYS SHOULD BE COVERED WITH PROPERLY ANCHORED, HEAVY GRADE SHEETS OF POLYEHTYLENE WHERE POSSIBLE. IF NOT POSSIBLE, STOCKPILES SHALL BE COVERED WITH A MINIMUM OF 3 TO 6 INCHES OF WOOD CHIPS TO MINIMIZE EROSION OF THE STOCKPILE. SILT FENCE SHALL BE INSTALLED AT THE TOE OF SLOPE TO CONTAIN MOVEMENT OF THE STOCKPILED MATERIAL. TOPSOIL SHALL NOT BE APPLIED TO THE STOCKPILES TO PREVENT TOPSOIL CONTAMINATION WITH HIGH ACID PRODUCING SOIL.
5. HIGH ACID PRODUCING SOILS WITH A pH OF 4 OR LESS, OR CONTAINING IRON SULFIDE, (INCLUDING BORROW FROM CUTS) SHALL BE ULTIMATELY PLACED OR BURIED WITH LIMESTONE APPLIED AT A RATE OF 6 TONS PER ACRE (OR 275 POUNDS PER 1,000 SQUARE FEET OF SURFACE AREA) AND COVERED WITH A MINIMUM OF 12 INCHES OF SETTLED SOIL WITH pH OF 5 OR MORE EXCEPT AS FOLLOWS:
   A. AREAS WHERE TREES OR SHRUBS ARE TO BE PLANTED SHALL BE COVERED WITH A MINIMUM OF 24 INCHES OF SOIL WITH A pH OF 5 OR MORE.
   B. DISPOSAL AREAS SHALL NOT BE LOCATED WITHIN 24 INCHES OF ANY SURFACE OF A SLOPE OR BANK, SUCH AS BERMS, STREAM BANKS, DITCHES AND OTHERS TO PREVENT POTENTIAL LATERAL LEACHING DAMAGES.
6. EQUIPMENT USED FOR MOVEMENT OF HIGH ACID PRODUCING SOILS SHOULD BE CLEANED AT THE END OF EACH DAY TO PREVENT SPREADING ANCHORED, HEAVY GRADE SHEETS OF POLYEHTYLENE WHERE POSSIBLE. OF HIGH ACID SOIL MATERIALS TO OTHER PARTS OF THE SITE, INTO STREAMS OR STORMWATER CONVEYANCES AND TO PROTECT MACHINERY FROM ACCELERATED RUSTING.
7. NON–VEGETATIVE EROSION CONTROL PRACTICES (STONE TRACKING PADS, STRATEGICALLY PLACED LIMESTONE CHECK DAM, SILT FENCE, WOOD CHIPS) SHOULD BE INSTALLED TO LIMIT THE MOVEMENT OF HIGH ACID PRODUCING SOILS FROM, AROUND OR OFF THE SITE.
8. FOLLOWING BURIAL OR REMOVAL OF HIGH ACID PRODUCING SOIL, TOPSOILING AND SEEDING OF THE SITE, MONITORING SHOULD CONTINUE FOR APPROXIMATELY 6 TO 12 MONTHS TO ASSURE THERE IS ADEQUATE STABILIZATION AND THAT NO HIGH ACID PRODUCING SOIL PROBLEMS EMERGE. IF PROBLEMS STILL EXIST THE AFFECTED AREA MUST BE TREATED AS INDICATED ABOVE TO CORRECT THE PROBLEM.
9. MONITORING OF AREAS WHERE HIGH ACID PRODUCING SOIL HAS BEEN PLACED OR BURIED SHOULD BE PERFORMED FOR AT LEAST 2 YEARS OR LONGER IF PROBLEMS OCCUR, TO ASSURE THERE IS NO MIGRATION OF POTENTIAL ACID LEACHATE.

SOIL EROSION CONTROL NOTES

1. ALL APPLICABLE EROSION AND SEDIMENT CONTROL PRACTICES SHALL BE IN PLACE PRIOR TO ANY GRADING OPERATION AND/OR INSTALLATION OF PROPOSED STRUCTURES OR UTILITIES.
2. SOIL EROSION AND SEDIMENT CONTROL PRACTICES ON THIS PLAN SHALL BE CONSTRUCTED IN ACCORDANCE WITH THE STANDARDS FOR SOIL EROSION AND SEDIMENT CONTROL IN NEW JERSEY.
3. APPLICABLE EROSION AND SEDIMENT CONTROL PRACTICES SHALL BE LEFT IN PLACE UNTIL CONSTRUCTION IS COMPLETED AND/OR THE AREA IS STABILIZED.
4. THE CONTRACTOR SHALL PERFORM ALL WORK, FURNISH ALL MATERIALS AND INSTALL ALL MEASURES REQUIRED TO REASONABLY CONTROL SOIL EROSION RESULTING FROM CONSTRUCTION OPERATIONS AND PREVENT EXCESSIVE FLOW OF SEDIMENT FROM THE CONSTRUCTION SITE.
5. ANY DISTURBED AREA THAT IS TO BE LEFT EXPOSED FOR MORE THAN THIRTY (30) DAYS AND NOT SUBJECT TO CONSTRUCTION TRAFFIC SHALL IMMEDIATELY RECEIVE A TEMPORARY SEEDING AND FERTILIZATION IN ACCORDANCE WITH THE NEW JERSEY STANDARDS AND THEIR RATES SHOULD BE INCLUDED IN THE NARRATIVE. IF THE SEASON PROHIBITS TEMPORARY SEEDING, THE DISTURBED AREAS WILL BE MULCHED WITH SALT HAY OR EQUIVALENT AND ANCHORED IN ACCORDANCE WITH THE NEW JERSEY STANDARDS (I.E. PEG AND TWINE, MULCH NETTING OR LIQUID MULCH BINDER).
6. IT SHALL BE THE RESPONSIBILITY OF THE DEVELOPER TO PROVIDE CONFIRMATION OF LIME, FERTILIZER AND SEED APPLICATION AND RATES OF APPLICATION AT THE REQUEST OF THE GLOUCESTER SOIL CONSERVATION DISTRICT.
7. ALL CRITICAL AREAS SUBJECT TO EROSION WILL RECEIVE A TEMPORARY SEEDING IN COMBINATION WITH STRAW MULCH AT A RATE OF 2 TONS PER ACRE, ACCORDING TO THE NEW JERSEY STANDARDS IMMEDIATELY FOLLOWING ROUGH GRADING.
8. THE SITE SHALL AT ALL TIMES BE GRADED AND MAINTAINED SUCH THAT ALL STORMWATER RUNOFF IS DIVERTED TO SOIL EROSION AND SEDIMENT CONTROL FACILITIES.
9. ALL SEDIMENTATION STRUCTURES WILL BE INSPECTED AND MAINTAINED ON A REGULAR BASIS AND AFTER EVERY STORM EVENT.
10. A CRUSHED STONE, TIRE CLEANING PAD WILL BE INSTALLED WHEREVER A CONSTRUCTION ACCESS EXISTS. THE STABILIZED PAD WILL BE INSTALLED ACCORDING TO THE STANDARD FOR STABILIZED CONSTRUCTION ACCESS.
11. ALL DRIVEWAYS MUST BE STABILIZED WITH 2½" CRUSHED STONE OR SUBBASE PRIOR TO INDIVIDUAL LOT CONSTRUCTION.
12. PAVED AREAS MUST BE KEPT CLEAN AT ALL TIMES.
13. ALL CATCH BASIN INLETS SHALL BE PROTECTED ACCORDING TO THE CERTIFIED PLAN.
14. ALL STORM DRAINAGE OUTLETS WILL BE STABILIZED, AS REQUIRED, BEFORE THE DISCHARGE POINTS BECOME OPERATIONAL.
15. ALL DEWATERING OPERATIONS MUST DISCHARGE DIRECTLY INTO A SEDIMENT FILTER AREA. THE SEDIMENT FILTER SHOULD BE COMPOSED OF A SUITABLE SEDIMENT FILTER FABRIC (SEE DETAIL). THE BASIN MUST BE DEWATERED TO NORMAL POOL WITHIN 10 DAYS OF THE DESIGN STORM.
16. NJSA 4:24–39, ET SEQ. REQUIRES THAT NO CERTIFICATE OF OCCUPANCY BE ISSUED BEFORE ALL PROVISIONS OF THE CERTIFIED SOIL EROSION AND SEDIMENT CONTROL PLAN HAVE BEEN COMPLIED WITH FOR PERMANENT MEASURES. ALL SITE WORK FOR THE PROJECT MUST BE COMPLETED PRIOR TO THE DISTRICT ISSUING A REPORT OF COMPLIANCE AS A PREREQUISITE TO THE ISSUANCE OF A CERTIFICATE OF OCCUPANCY BY THE MUNICIPALITY.
17. MULCHING IS REQUIRED ON ALL SEEDED AREAS TO INSURE AGAINST EROSION BEFORE GRASS IS ESTABLISHED TO PROMOTE EARLIER VEGETATION COVER.
18. OFFSITE SEDIMENT DISTURBANCE MAY REQUIRE ADDITIONAL CONTROL MEASURES TO BE DETERMINED BY THE EROSION CONTROL INSPECTOR.
19. A COPY OF THE CERTIFIED SOIL EROSION AND SEDIMENT CONTROL PLAN MUST BE MAINTAINED ON THE PROJECT SITE DURING CONSTRUCTION.
20. THE GLOUCESTER COUNTY SOIL CONSERVATION DISTRICT SHALL BE NOTIFIED 48 HOURS PRIOR TO ANY LAND DISTURBANCE.
21. ANY CONVEYANCE OF THIS PROJECT PRIOR TO ITS COMPLETION WILL TRANSFER FULL RESPONSIBILITY FOR COMPLIANCE WITH THE CERTIFIED PLAN TO ANY SUBSEQUENT OWNERS.
22. IMMEDIATELY AFTER THE COMPLETION OF STRIPPING AND STOCKPILING OF TOPSOIL, THE STOCKPILE MUST BE STABILIZED ACCORDING TO THE STANDARD FOR TEMPORARY VEGETATIVE COVER. STABILIZE TOPSOIL STOCKPILE WITH STRAW MULCH FOR PROTECTION IF THE SEASON DOES NOT PERMIT THE APPLICATION AND ESTABLISHMENT OF TEMPORARY SEEDING. ALL SOIL STOCKPILES ARE NOT TO BE LOCATED WITHIN FIFTY (50) FEET OF A FLOODPLAIN, SLOPE, ROADWAY OR DRAINAGE FACILITY AND THE BASE MUST BE PROTECTED WITH A SEDIMENT BARRIER.
23. ANY CHANGES TO THE SITE PLAN WILL REQUIRE THE SUBMISSION OF A REVISED SOIL EROSION AND SEDIMENT CONTROL PLAN TO THE GLOUCESTER SOIL CONSERVATION DISTRICT. THE REVISED PLAN MUST BE IN ACCORDANCE WITH THE CURRENT NEW JERSEY STANDARDS FOR SOIL EROSION AND SEDIMENT CONTROL.
24. METHODS FOR THE MANAGEMENT OF HIGH ACID PRODUCING SOILS SHALL BE IN ACCORDANCE WITH THE STANDARDS. HIGH ACID PRODUCING SOILS ARE THOSE FOUND TO CONTAIN IRON SULFIDES OR HAVE A pH OF 4 OR LESS.
25. TEMPORARY AND PERMANENT SEEDING MEASURES MUST BE APPLIED ACCORDING TO THE NEW JERSEY STANDARDS, AND MULCHED WITH SALT HAT OR EQUIVALENT AND ANCHORED IN ACCORDANCE WITH THE NEW JERSEY STANDARDS (I.E. PEG AND TWINE, MULCH NETTING OR LIQUID MULCH BINDER).
26. MAXIMUM SIDE SLOPES OF ALL EXPOSED SURFACES SHALL NOT BE CONSTRUCTED STEEPER THAN 3:1 UNLESS OTHERWISE APPROVED BY THE DISTRICT.
27. DUST IS TO BE CONTROLLED BY AN APPROVED METHOD ACCORDING TO THE NEW JERSEY STANDARDS AND MAY INCLUDE WATERING WITH A SOLUTION OF CALCIUM CHLORIDE AND WATER.
28. ADJOINING PROPERTIES SHALL BE PROTECTED FROM EXCAVATION AND FILLING OPERATIONS ON THE PROPOSED SITE.
29. USE STAGED CONSTRUCTION METHODS TO MINIMIZE EXPOSED SURFACES, WHERE APPLICABLE.
30. ALL VEGETATIVE MATERIAL SHALL BE SELECTED IN ACCORDANCE WITH AMERICAN STANDARDS FOR NURSERY STOCK OF THE AMERICAN ASSOCIATION OF THE NURSERYMAN AND IN ACCORDANCE WITH THE NEW JERSEY STANDARDS.
31. NATURAL VEGETATION AND SPECIES SHALL BE RETAINED WHERE SPECIFIED ON THE LANDSCAPING PLAN.
32. THE SOIL EROSION INSPECTOR MAY REQUIRE ADDITIONAL SOIL EROSION MEASURES TO BE INSTALLED, AS DIRECTED BY THE DISTRICT INSPECTOR.

CONSTRUCTION SCHEDULE AND PROCEDURE FOR IMPLEMENTATION OF SOIL EROSION AND SEDIMENT CONTROL MEASURES

		DURATION
1.	NOTIFY THE GLOUCESTER COUNTY SOIL CONSERVATION DISTRICT IN WRITING AT LEAST 48 HOURS PRIOR TO CONSTRUCTION.	–
2.	INSTALL SOIL EROSION CONTROL MEASURES, INCLUDING STABILIZED CONSTRUCTION ENTRANCE AND SILT FENCE, AND SEDIMENT INLET FILTERS WHERE REQUIRED.	1 WEEK
3.	DEMOLITION OF EXISTING INFRASTRUCTURE AND IMPROVEMENTS PER DEMOLITION PLAN.	2 WEEKS
4.	GRUB AND CLEAR SITE, STRIP TOPSOIL AND STOCKPILE. STABILIZE STOCKPILE IMMEDIATELY WITH TEMPORARY SEEDING AND MULCH, WHERE REQUIRED.	3 WEEKS
5.	REMOVE TRASH DEBRIS AND ROUGH GRADE SITE. FINAL GRADE CRITICAL SLOPES, INSTALL PERMANENT STABILIZATION AS SOON AS POSSIBLE.	2 WEEKS
6.	EXCAVATE BIORETENTION BASINS, INSTALL OUTLET STRUCTURES, INSTALL PERMANENT STABILIZATION TO BASIN SLOPES AND TEMPORARY STABILIZATION TO BASIN BOTTOMS.	3 WEEKS
7.	PROVIDE TEMPORARY STABILIZATION MEASURES FOR ALL PROPOSED PERVIOUS AREAS, WHERE NEEDED.	1 WEEK
8.	INSTALL SEWER, WATER, AND OTHER SERVICE UTILITIES. CONSTRUCT STORMWATER CONVEYANCE INFRASTRUCTURE.	1 WEEK
9.	INSTALL INLET PROTECTION.	1 DAY
10.	INSTALL ROAD BASE COURSE.	1 WEEK
11.	CONSTRUCT PROPOSED BUILDINGS, DRIVEWAYS, SIDEWALKS. INSTALL CURBSIDE SEDIMENT BARRIERS AFTER CURB AND UTILITY INSTALLATION.	4 WEEKS
12.	SOIL COMPACTION TESTING AND/OR SUBSOIL COMPACTION REMEDIATION TESTING AND/OR RESTORATION MUST BE DONE PRIOR TO PLACEMENT OF TOPSOIL. IF TESTING COMPACTION, AND SCD INSPECTOR MUST WITNESS THE TESTING.	1 DAY
13.	TOPSOIL (5") AND FINAL GRADE SITE.	2 WEEKS
14.	INSTALL LANDSCAPING IMPROVEMENTS. REPAIR ERODED AREAS.	1 WEEK
15.	REMOVE ALL ACCUMULATED SEDIMENT FROM THE STORMWATER BASINS AND EXCAVATE FOR INSTALLATION OF THE UNDERDRAIN. INSTALL BASIN PLANTINGS.	3 DAYS
16.	REMOVE ANY TEMPORARY SEDIMENT RISERS AND PLUG ORIFICE. REMOVE SUMP PITS.	1 DAY
17.	REMOVE SOIL EROSION CONTROL MEASURES UPON PERMANENT STABILIZATION OF THE SITE.	1 DAY

K2 Consulting Engineers, Inc.
Professional Civil Engineers
Certificate of Authorization #24GA28187400
36 Tanner Street, Suite 100
Haddonfield, NJ 08033
Phone - 856.310.5205
Fax - 856.616.2441
www.K2CE.com

BY	REVISION	DATE

SOIL EROSION AND SEDIMENT CONTROL DETAILS
455 MAIN STREET
BLOCK 160 - LOT 13 - TAX MAP SHEET 31
SITUATE IN THE
TOWNSHIP OF MANTUA, GLOUCESTER COUNTY, NEW JERSEY

JOHN W. KORNICK, P.E.
Professional Engineer, New Jersey Lic. No. 24GE04928500

DATE: 06/30/2025
DESIGN BY: WFR
DRAWN BY: WFR
SCALE: N.T.S.
JOB NO.: PD23–129
SHEET 20 OF 27

DWG. NAME: W:\PROJECT FILES\PD23 Projects\PD23-129 - 455 Main Street, Twp of Mantua, Gloucester County\09-AUTOCAD\DESIGN\details.dwg

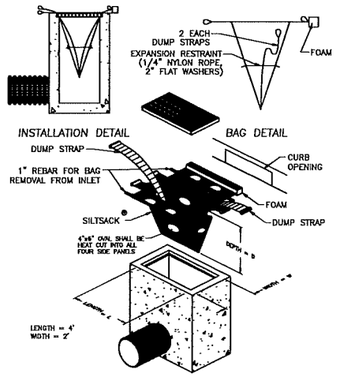

INLET PROTECTION MAINTENANCE NOTES:
INSPECTIONS SHALL BE FREQUENT. MAINTENANCE, REPAIR, AND REPLACEMENT SHALL BE MADE PROMPTLY, AS NEEDED. THE FILTER SHALL BE REMOVED WHEN THE AREA DRAINING TOWARD THE INLET HAS BEEN STABILIZED.

NOTE:
1) USE 2'X4' SILTSACK WITH CURB DEFLECTOR MANUFACTURED BY ACF ENVIRONMENTAL, INC., OR APPROVED EQUAL.

TEMPORARY TYPE "A"/"B"/"E" INLET PROTECTION DETAIL

N.T.S.

1. BIORETENTION MEDIA SHALL CONFORM TO THE FOLLOWING SPECIFICATIONS

PROPERTY	REQUIREMENT
PH	5.5–6.5
MG	35 LB/AC
K	85 LB/AC
SALTS	<500 PPM
CEC	10–25 CMOL/KG
ORGANIC MATTER	3.0–7.0%
SAND	85–95%
SILT	5–8%
CLAY	2–5%

NO MORE THAN 25% OF THE SAND SHALL BE FINE OR VERY FINE. ALL PERCENTAGE ARE BY WEIGHT

2. THE SAND COMPONENT SHALL AT THE MINIMUM CONFORM TO THE SIEVE ANALYSIS FOR CONCRETE AGGREGATE SAND (ASTM C–33), AND HAVE A PHOSPHOROUS COMPOSITION OF NO GREATER THAN 10 MG/KG. THE USGA TEE/GREEN SIEVE GRADATION MIX C#108 IS PREFERABLE WHERE AVAILABLE.
3. NATIVE TOPSOIL CAN BE USED TO PROVIDE THE SILT AND CLAY TO MEET THESE SPECIFICATIONS WHEN USED IN THE PROPER MIXTURE W/ SAND, PROVIDING THAT THE RESULTING SOIL BRAY P1 TEST IS LESS THAN 20, OR THE TOTAL PHOSPHOROUS CONTENT IS LESS THAN 75 MG/KG.
4. A MINIMUM OF 15% (BY VOLUME) AGED SPHAGNUM PEAT MOSS SHALL BE ADDED TO THE MIXTURE TO MEET THE REQUIRED ORGANIC MATTER CONTENT. COMPOST SHALL COMPRISE NO MORE THAN 0.5% BY WEIGHT (5% BY VOLUME), AND SHALL BE RESTRICTED TO THE PLANTING SURFACE
5. THE MEDIA SHALL BE THOROUGHLY BLENDED, PREFERABLY AT A MIXING PLANT. THE ONLY METHOD TO BLEND THE MEDIA ON–SITE SHALL REQUIRE A SCREENING PLANT WITH ADEQUATE CAPACITY TO ENSURE THAT THE PROPER RATIOS ARE FULLY BLENDED.
6. THE MEDIA SHALL BE PLACED IN TWO LAYERS, WITH THE TOP OF THE LOWER LAYER SCARIFIED TO ENCOURAGE VERTICAL RATHER THAN HORIZONTAL FLOW AT THE INTERFACE BETWEEN LAYERS. THE LAYER COMBINATION CONSISTS OF A BOTTOM LAYER OF LOAMY PEAT–SAND OVERLAIN BY 6" OF THE SAME LOAMY PEAT–SAND, MIXED WITH 5% COMPOST IN ORDER TO REACH AN APPROPRIATE ORGANIC CONTENT TO PROMOTE INITIAL GROWTH OF THE PLANT MATERIAL.
7. CALCITIC LIME SHALL BE ADDED AS REQUIRED TO MEET THE PH SPECIFICATIONS.
8. ALL ORGANIC MATTER AMENDMENTS, TOPSOIL AND SAND SHALL BE TESTED FOR GRADATION AND FERTILITY AND PHOSPHOROUS CONTENT TO OBTAIN THE PROPER MIXTURE RATIO. THE MEDIA SHALL BE MIXED WITH A SCREENING PLANT OR SIMILAR LARGE–SCALE MIXING EQUIPMENT. THE ONSITE "DIG AND DROP" METHOD SHALL NOT BE PERMITTED.
9. THE ENGINEER SHALL APPROVE OF THE MIXTURE RATIO AND METHOD BEFORE PERMITTING THE BIORETENTION MEDIA TO BE PLACED IN THE FACILITY.
10. EXISTING FILL DIRT AND TOPSOIL MUST BE COMPLETELY REMOVED BEFORE INSTALLING UNDERDRAIN STONE AND BIORETENTION MEDIA.
11. ALL BIORETENTION MEDIA SHALL BE PLACED BY TRACKHOE EXCAVATOR FROM THE SIDES OF THE FACILITIES, AND IN NO EVENT SHALL ANY TRACKED OR WHEELED EQUIPMENT BE PERMITTED TO CROSS THE BIORETENTION MEDIA. THE ENGINEER SHALL BE PRESENT TO WITNESS THE PLACEMENT OF BIORETENTION MEDIA. THE BULK DENSITY OF THE INSTALLED MEDIA SHALL BE NO MORE THAN 95 POUNDS PER CUBIC FOOT.
12. TO ALLOW FOR SETTLEMENT, THE BIORETENTION MEDIA SHALL BE LOOSELY PLACED AT A DEPTH ABOVE FINAL GRADE EQUAL TO 115% OF THE SPECIFIED DEPTH. IT SHALL BE LEVELED BY HAND.
13. THE TESTED PERMEABILITY RATE FOR THE BIORETENTION MEDIA SHALL BE A MINIMUM RATE OF 4"/HR AND A MAXIMUM RATE OF 20"/HR.

BIORETENTION MEDIA SPECIFICATIONS

N.T.S.

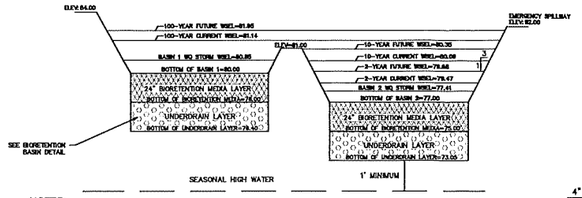

NOTES:

1. BASIN CONSTRUCTION MUST NOT COMPACT SOILS BELOW BASIN BOTTOM.
2. WHEN THE DRAINAGE AREA IS COMPLETELY STABILIZED, ALL ACCUMULATED SEDIMENT SHALL BE REMOVED FROM THE BASIN, AND THE BASIN SHALL BE EXCAVATED AND CONSTRUCTED TO ITS FINAL DESIGN ELEVATION, INCLUDING THE UNDERDRAINS, AND BIORETENTION MEDIA.

BASIN #1/#2 SECTION DETAIL

N.T.S.

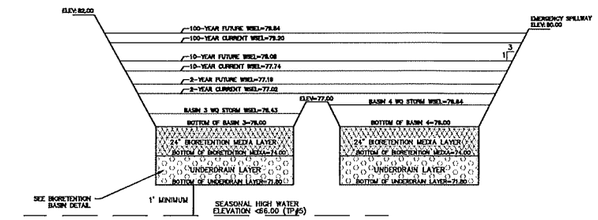

NOTES:

1. BASIN CONSTRUCTION MUST NOT COMPACT SOILS BELOW BASIN BOTTOM.
2. WHEN THE DRAINAGE AREA IS COMPLETELY STABILIZED, ALL ACCUMULATED SEDIMENT SHALL BE REMOVED FROM THE BASIN, AND THE BASIN SHALL BE EXCAVATED AND CONSTRUCTED TO ITS FINAL DESIGN ELEVATION, INCLUDING THE UNDERDRAINS, AND BIORETENTION MEDIA.

BASIN #3/#4 SECTION DETAIL

N.T.S.

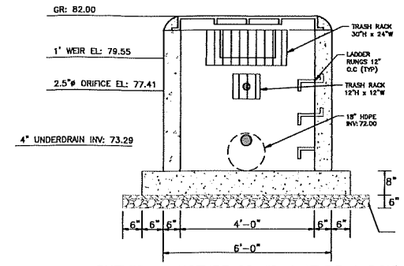

OUTLET STRUCTURE OS #2–1 (TYPE A BOX)

N.T.S.

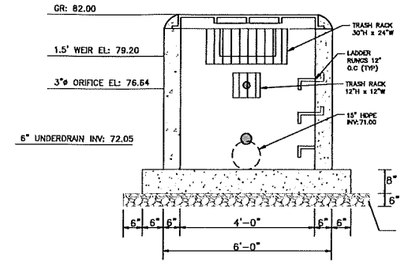

OUTLET STRUCTURE OS #4–1 (TYPE A BOX)

N.T.S.

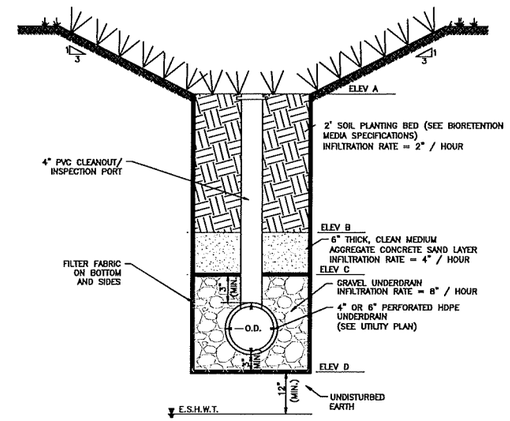

BASIN	ELEV. A	ELEV. B	ELEV. C	ELEV. D
1	80.00	78.00	77.50	76.40
2	77.00	75.00	74.50	73.05
3	76.00	74.00	73.50	71.80
4	76.00	74.00	73.50	71.80

BIORETENTION BASIN DETAIL

N.T.S.

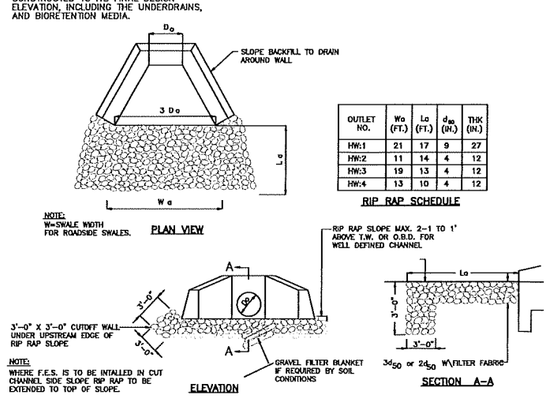

OUTLET NO.	Wa (FT.)	La (FT.)	d_{50} (IN.)	THK (IN.)
HW:1	21	17	9	27
HW:2	11	14	4	12
HW:3	19	13	4	12
HW:4	13	10	4	12

RIP RAP SCHEDULE

CONDUIT OUTLET PROTECTION DETAIL

N.T.S.

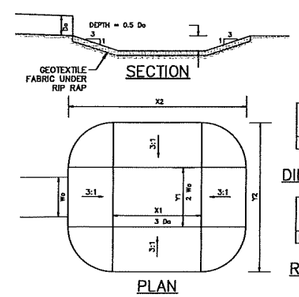

OUTLET NO.	X1 (FT.)	Y1 (FT.)	X2 (FT.)	Y2 (FT.)
HW #5	4.5	3	10.5	9

DIMENSION SCHEDULE

OUTLET NO.	Wa (FT.)	Do (FT.)	d_{50} (IN.)	D.R. W/ FILTER FAB.
HW #5	1.5	1.5	4	12

RIP RAP SCHEDULE

PREFORMED SCOUR HOLE CONDUIT OUTLET PROTECTION

N.T.S.

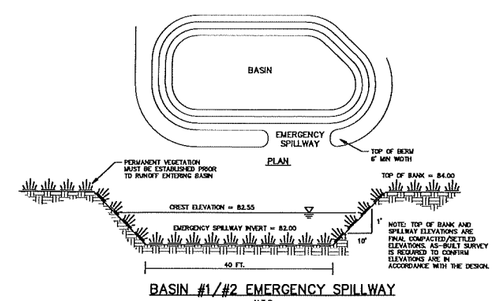

BASIN #1/#2 EMERGENCY SPILLWAY

N.T.S.

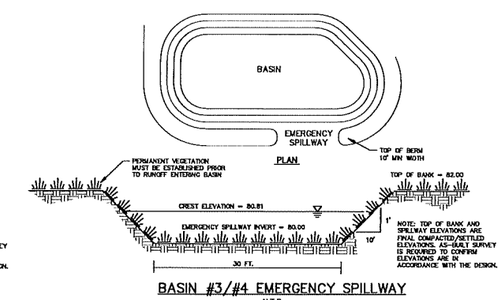

BASIN #3/#4 EMERGENCY SPILLWAY

N.T.S.

K2 Consulting Engineers, Inc.
Professional Civil Engineers
Certificate of Authorization #24GA28187400
36 Tanner Street, Suite 100
Haddonfield, NJ 08033
Phone - 856.310.5205
Fax - 856.616.2441
www.K2CE.com

DATE	REVISION	BY

SOIL EROSION AND SEDIMENT CONTROL DETAILS
455 MAIN STREET
BLOCK 160 - LOT 13 - TAX MAP SHEET 31
SITUATE IN THE
TOWNSHIP OF MANTUA, GLOUCESTER COUNTY, NEW JERSEY

JOHN W. KORNICK, P.E.
Professional Engineer, New Jersey Lic. No. 24GE04928500

DATE:	06/30/2025
DESIGN BY:	WFR
DRAWN BY:	WFR
SCALE:	N.T.S.
JOB NO.:	PD23–129
SHEET	21 OF 27

DWG. NAME: W:\PROJECT FILES\PD23 Projects\PD23-129 - 455 Main Street, Twp of Mantua, Gloucester County\09-AUTOCAD\DESIGN\details.dwg

DWG. NAME: W:\PROJECT FILES\PD23 Projects\PD23-129 - 455 Main Street, Twp of Mantua, Gloucester County\09-AUTOCAD\DESIGN\details.dwg

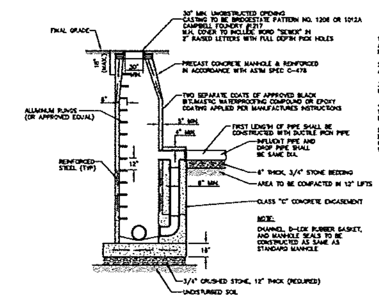

NOTES:

1. IN GENERAL, FLAT TOP MANHOLES ARE NOT ACCEPTED UNLESS OTHERWISE AUTHORIZED BY THE MANTUA MUA ENGINEER IN WRITING.
2. CRUSHED CONCRETE AND ASPHALT ARE NOT ACCEPTABLE SUBSTITUTES FOR CRUSHED STONE BASE.
3. RING RISERS ARE PERMITTED FOR ADJUSTMENT OF FINAL GRADE CASTINGS, PER ENGINEER APPROVAL.
4. PVC DROP PIPE TO BE USED IN CONNECTION WITH PRECAST DROP MANHOLE BASE. D.I.P. TO BE USED IN ALL OTHER CASES.
5. ALL MANHOLE CASTINGS LOCATED WITHIN AN EARTHEN AREA OR NOT SITUATED WITHIN THE CENTERLINE OF ROADWAY SHALL HAVE A COVER WITH NON-PENETRATING PICK HOLES.

PRECAST DROP MANHOLE DETAIL
N.T.S.

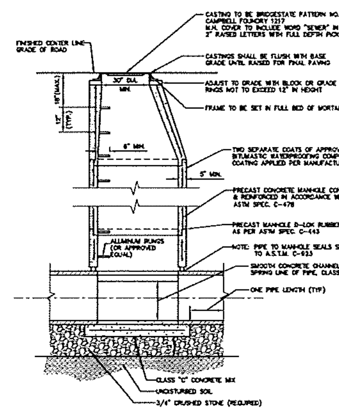

NOTES

1. IN GENERAL, FLAT TOP MANHOLES ARE NOT ACCEPTED UNLESS OTHERWISE AUTHORIZED BY THE MANTUA MUA ENGINEER IN WRITING.
2. CRUSHED CONCRETE AND ASPHALT ARE NOT ACCEPTABLE SUBSTITUTES FOR CRUSHED STONE BASE.
3. RING RISERS ARE PERMITTED FOR ADJUSTMENT OF FINAL GRADE CASTINGS, PER ENGINEERS APPROVAL.
4. ALL MANHOLE CASTINGS LOCATED WITHIN AN EARTHEN AREA OR NOT SITUATED WITHIN THE CENTERLINE OF ROADWAY SHALL HAVE A COVER WITH NON-PENETRATING PICK HOLES.

PRECAST CONCRETE MANHOLE DETAIL
N.T.S.

SPECIFICATIONS

HYDRANTS	5 1/4" A-423 6" OR LARGER WATERMAIN, A-421 4" WATERMAIN MUELLER STANDARD, 4' - 6" BURY, 2 - 2 1/2" HOSE NOZZLE, NST THREADED COUPLING AND 1 - 5" STORZ CONNECTION W/BLIND CAP AND CHAIN, 1 1/2" PENTAGON OPEN LEFT, 6" MECHANICAL JOINT SHOE
VALVES	OPEN LEFT, NON-RISING STEM, MECHANICAL JOINT ENDS, 200 LBS. WORKING PRESSURE, 400 LBS. TEST, DUCK TIPPED RUBBER GASKET AND SCREW SETS IN GLAND FOR BONDING (MUELLER 866)
SPOOL PIECE	AWWA CLASS "D" METAL THICKNESS, WITH APPLICABLE DIMENSION, LAYING LENGTHS AND RADII, CONFORMING TO AWWA A21.10 AND AWWA C-111
VALVE BOX	BUFFALO TYPE, 3 PIECE CAST IRON.
NOTES:	WHEN SPOOL IS UNAVAILABLE, HYDRANT MUST BE TE-RODDED TO THE VALVE.
	HYDRANTS TO BE COVERED WITH A BURLAP BAG UNTIL SYSTEM HAS BEEN APPROVED.

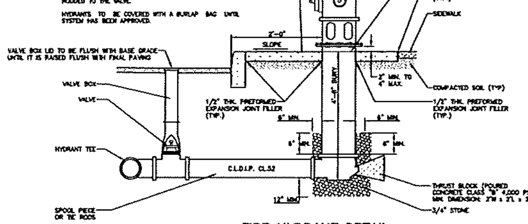

FIRE HYDRANT DETAIL
N.T.S.

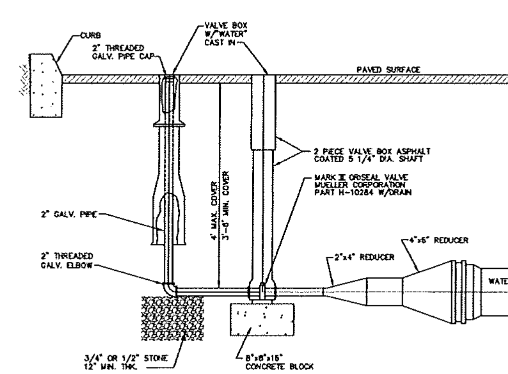

BLOW-OFF DETAIL
N.T.S.

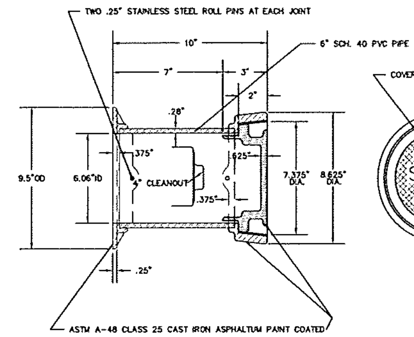

NOTE:
MUST BE APPROVED BY M.U.A. ENGINEER AND/OR MANTUA TWP. MUA PRIOR TO INSTALLATION IN FIELD.

BODY PART NO. 461-TS

GENCO PART NO. "CC4"
(AND/OR APPROVED EQUAL)
DWG. R-3218-DR ILLUSTRATES RISER FOR THIS COVER

SANITARY SEWER CLEANOUT COVER DETAIL
N.T.S.

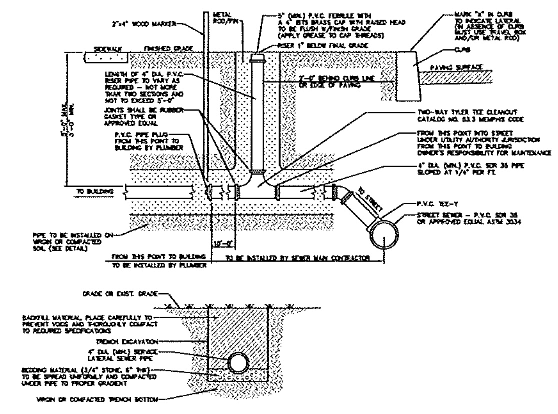

STANDARD LATERAL DETAIL
3'-8' IN DEPTH
N.T.S.

NOTE:
SIZE OF WATER SERVICE TO BE DETERMINED AT TIME OF PLAN REVIEW.

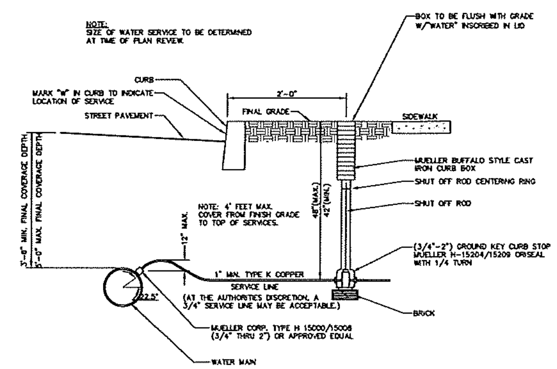

WATER SERVICE DETAIL
N.T.S.

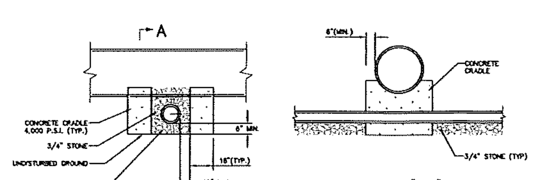

CONCRETE CRADLE DETAIL
N.T.S.

NOTES:

1. CONCRETE CRADLE TO BE PROVIDED WHEN AND WHERE DIRECTED ON PLANS OR BY MANTUA TOWNSHIP M.U.A. FIELD REPRESENTATIVE
2. CRADLES OR ENCASEMENTS ARE REQUIRED WHEN LESS THAN 18" VERTICAL SEPARATION BETWEEN OUTSIDE WALLS OF CROSSING PIPES. PLACE AS DIRECTED BY THE M.M.U.A. FIELD REPRESENTATIVE.

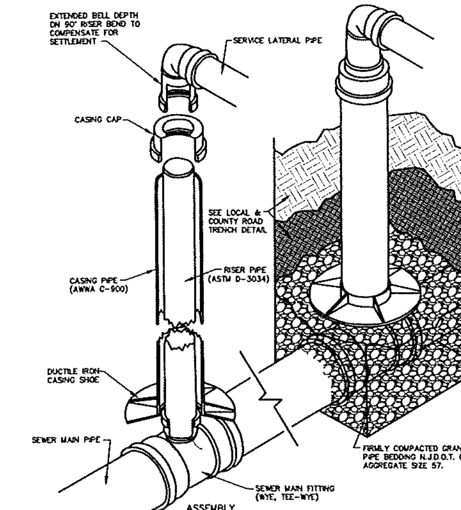

ASSEMBLY

RISER CONSTRUCTED TO PREVENT VERTICAL OR LATERAL FORCES ON THE RISER PIPE OR FITTINGS CONNECTED THERE-TO.

EMBEDDED SEWER MAIN FITTINGS IN COMPACTED CLASS 1A OR 1B MATERIAL AS DEFINED IN SECTION 5.3 OF ASTM SPEC D2321 TO A MIN DEPTH OF THE BRANCH OUTLET.

DEEP CUT LATERAL DETAIL (OVER 8' DEPTH)
N.T.S.

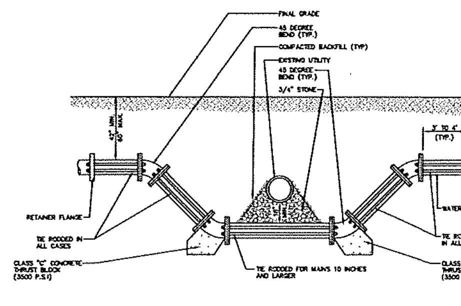

WATER MAIN OFF-SET DETAIL
N.T.S.

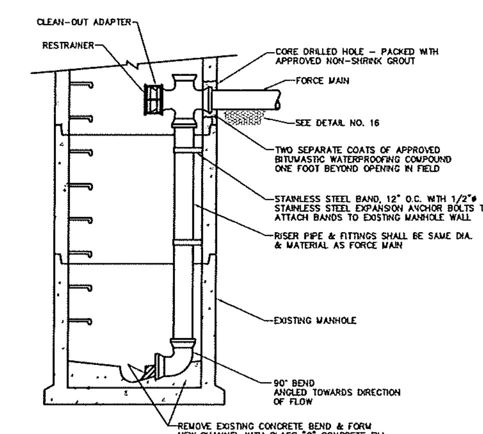

NOTE: PROVIDE A PIPE JOINT WITHIN FOUR (4) FEET OF EXISTING MANHOLE TO ALLOW FOR SETTLEMENT.

CONTRACTOR SHALL BE RESPONSIBLE FOR ANY DAMAGES TO THE EXIST. MANHOLE AND ADJACENT PROPERTIES.

FORCE MAIN - INSIDE DROP CONNECTION DETAIL
N.T.S.

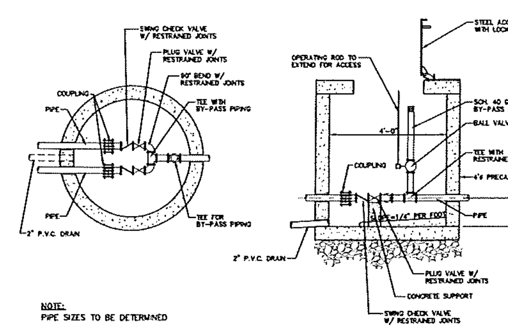

NOTE:
PIPE SIZES TO BE DETERMINED

VALVE PIT DETAIL
N.T.S.

PROVIDE DAVIT SIZED APPROPRIATLY FOR PUMPS SUPPLIED.

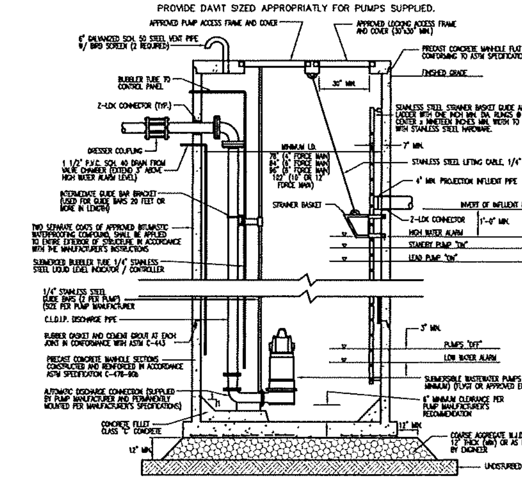

NOTES:

1. INFLUENT PIPE, STRAINER BASKET, LIFTING CABLE, AND LADDER ROTATED 90 DEGREES FROM CLARITY. SEE STANDARD PUMP STATION DETAIL AND NOTES, DWG. NO. 26, 27, AND 28.
2. ALL PUMP STATION HARDWARE TO BE STAINLESS STEEL.

STANDARD PUMP STATION DETAIL
N.T.S.

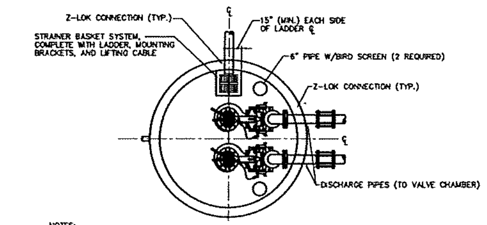

NOTES:

1. SUBMERSIBLE PUMPS AND MOTORS SHALL BE EXPLOSION PROOF & INDICATED WITH AN "X" LABEL AND COMPLETELY SU AT ALL TIMES.
2. THE LEAD PUMP SELECTION SHALL ALTERNATE WITH EACH PUMPING CYCLE SO AS TO ENSURE EVEN PUMP WEAR.
3. THE PUMP CONTROL SYSTEM SHALL BE OF THE BUBBLER TYPE INCORPORATING A LIQUID LEVEL INDICATOR / CONTROLLI THE LEVEL SENSING AND SIGNAL CONTROL DEVICE.
4. TWO (2) AIR COMPRESSORS SHALL BE FURNISHED FOR AIR SUPPLY TO THE BUBBLER SYSTEM: ONE FOR NORMAL OPER/ AND ONE FOR STANDBY OPERATION.
5. ONE PUMP SHALL BE FITTED WITH A MIX-FLUSH VALVE, INSTALLED IN ACCORDANCE WITH THE MANUFACTURER'S SPECIFI
6. THE TELEMETERING SYSTEM SHALL BE AS SPECIFIED BY THE AUTHORITY ENGINEER TO GIVE WARNING OF HIGH WATER, P FAILURE, MECHANICAL FAILURE, LOW WATER LEVEL, ETC.
7. THE INFLUENT PIPE SHALL BE CEMENT LINED DUCTILE IRON PIPE FROM THE NEAREST STRUCTURE TO THE WET WELL TO DEFLECTION IN THE AREA OF THE WET WELL EXCAVATION.
8. ALL PIPE CONNECTIONS WITHIN THE WET WELL SHALL UTILIZE FLANGED FITTINGS.
9. BUOYANCY CALCULATIONS SHALL BE SUBMITTED TO ENSURE AGAINST WET WELL FLOTATION.
10. WET WELL SHALL HAVE AN INTERIOR PLASTIC LINER (PVC) INSTALLED DURING THE CASTING PROCESS.
11. ALL MOTORS SHALL BE THREE (3) PHASE.
12. AN AUXILIARY GENERATOR SHALL BE REQUIRED TO ALLOW CONTINUOUS FLOW OF WASTEWATER DURING TEMPORARY POW OUTAGES. GENERATORS SHALL BE SOUND ATTENUATED HOUSED AND HEATED. CONTACT THE AUTHORITY ENGINEER FOR REQUIREMENTS AND DETAILS.
13. FORCE MAINS SHALL BE A MINIMUM OF 4" (INSIDE DIAMETER).

STANDARD PUMP STATION DETAIL AND NOTES
N.T.S.

NOTES

1. VALVE TO OPEN LEFT AND HAVE A NON-RISING STEM, MECHANICAL JOINT ENDS, 200-lb WORKING PRESSURE, 400-lb TEST PRESSURE, DUCK TIPPED RUBBER GASKET AND SCREW SETS IN GLAND FOR BONDING (MUELLER 866).
2. VALVE BOX TO BE BUFFALO TYPE, 3 PIECE CAST IRON, SLIDE OR SCREW TYPE. TABS WITHIN SLIDE MODEL SHALL NOT BE REMOVED.
3. RISERS MAYBE PERMITTED FOR ADJUSTMENT OF FINAL GRADE OF VALVE BOXES PER MUA ENGINEERS APPROVAL.
4. VALVE BOX MUST BE PLUMB AND CLEANED OF ALL DEBRIS. THE SHUT-OFF NUT MUST BE CENTERED WITHIN THE BOX AND HAVE 1" CLEARANCE BETWEEN THE INSIDE OF THE BOX AND THE VALVE WRENCH.
5. VALVE BOX LID TO HAVE THE WORD "WATER" CAST IN, WITH AN ARROW SHOWING THE OPENING DIRECTION, AND THE WORD " OPEN " CLEARLY CAST THEREON.

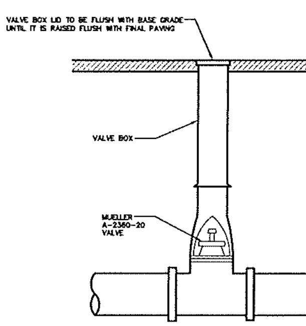

GATE VALVE & VALVE BOX DETAIL
N.T.S.

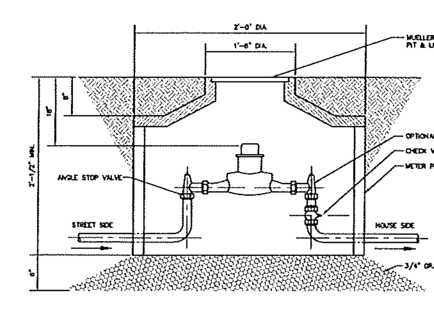

NOTE:
1. 18" DIA. MH. COVERS FOR 1/2", 3/4", 1" PIPE
2. 24" DIA. MH. COVERS FOR 1-1/2", 2" PIPE

VALVE PIT DETAIL
N.T.S.

K2 Consulting Engineers, Inc.

Professional Civil Engineers
Certificate of Authorization
#24GA28187400

36 Tanner Street, Suite 100
Haddonfield, NJ 08033
Phone - 856.310.5205
Fax - 856.616.2441
www.K2CE.com

REVISION	DATE	BY

SEWER & WATER DETAILS
455 MAIN STREET
BLOCK 160 - LOT 13 - TAX MAP SHEET 31
SITUATE IN THE
TOWNSHIP OF MANTUA, GLOUCESTER COUNTY, NEW JERSEY

JOHN W. KORNICK, P.E.
Professional Engineer, New Jersey Lic. No. 24GE04928500

DATE:	06/30/2025
DESIGN BY:	WFR
DRAWN BY:	WFR
SCALE:	N.T.S.
JOB NO.:	PD23-129
SHEET	22 OF 27

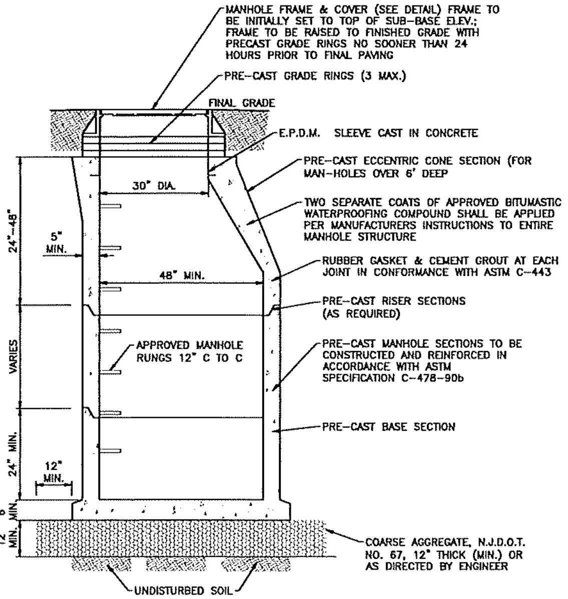

PRECAST STORM SEWER MANHOLE DETAIL
N.T.S.

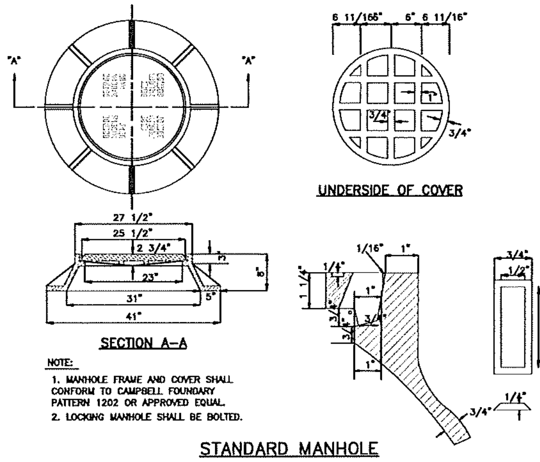

NOTE:
1. MANHOLE FRAME AND COVER SHALL CONFORM TO CAMPBELL FOUNDARY PATTERN 1202 OR APPROVED EQUAL.
2. LOCKING MANHOLE SHALL BE BOLTED.

STANDARD MANHOLE FRAME AND COVER
N.T.S.

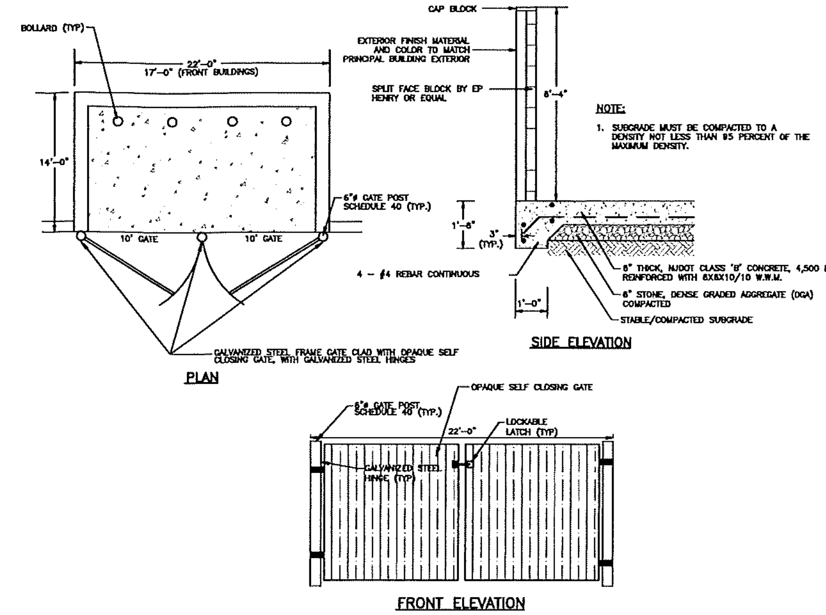

NOTE:
1. SUBGRADE MUST BE COMPACTED TO A DENSITY NOT LESS THAN 95 PERCENT OF THE MAXIMUM DENSITY.

BLOCK TRASH ENCLOSURE DETAIL
N.T.S.

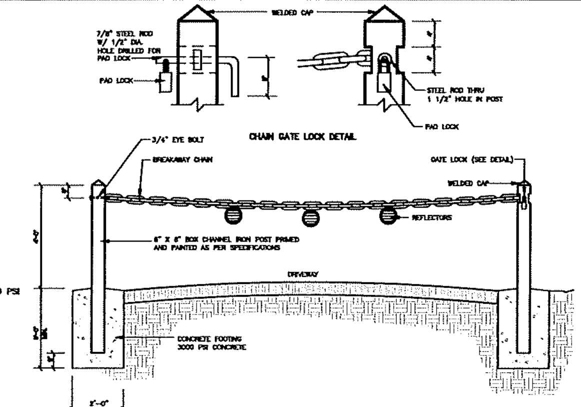

BREAKAWAY CHAIN GATE DETAIL
N.T.S.

NOTES:
1. BACKFILL IN EXISTING PAVED AREAS IS TO BE PLACED IN 6" LIFTS, COMPACTED TO 95% OF MAXIMUM DENSITY.
2. WHEN DISURBING EXISTING PAVEMENT, THE PAVEMENT IS TO BE SAWED CUT ONE FOOT BEYOND THE EDGE OF THE TRENCH.

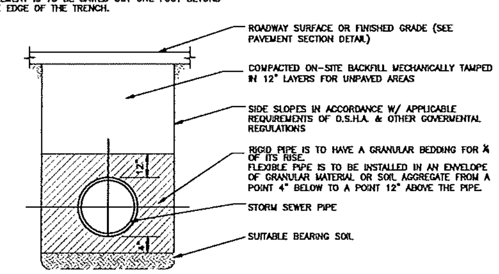

TYPICAL STORM SEWER PIPE BEDDING
N.T.S.

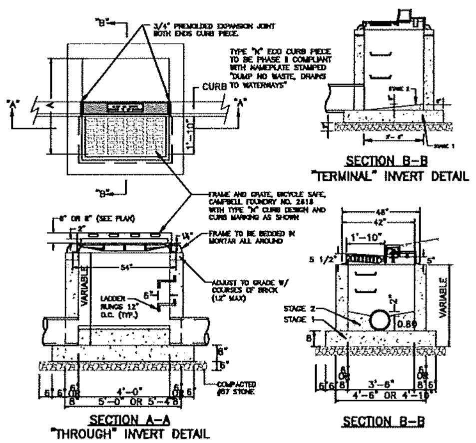

GENERAL NOTES: INLET TYPE B & D
1. INLETS MAY BE CONSTRUCTED OF BRICK, CONCRETE, CONCRETE BLOCK, OR PRECAST CONCRETE. WALLS SHALL BE 8" THICK IF BRICK AND 6" THICK IF CONCRETE, CONCRETE BLOCK, OR PRECAST CONCRETE. CONCRETE FOR FOUNDATIONS AND INVERTS SHALL BE CLASS B.
2. FOUNDATIONS & INVERTS SHALL BE CONSTRUCTED IN TWO STAGES. TOP OF STAGE 1 SHALL BE LEFT ROUGH AND THE BOTTOM OF THE FOOTING SHALL BE 6" BELOW THE OUTER WALL OF THE LOWEST PIPE IN THE INLET.
3. WHEN THE DEPTH OF A NON-PRECAST INLET EXCEEDS 10 FT FROM GRATE TO INVERT, THE THICKNESS OF THE WALLS BELOW A DEPTH OF 8 FT SHALL BE INCREASED TO 12", UNLESS ROCK IS ENCOUNTERED.
4. WHEN THE DEPTH OF A PRECAST INLET EXCEEDS 10 FT FROM GRATE TO INVERT, THE THICKNESS OF THE FOUNDATION SHALL BE INCREASED TO 12", UNLESS ROCK IS ENCOUNTERED.
5. THE WALLS SHALL BE PLASTERED BOTH INSIDE AND OUTSIDE WITH 1/2" THICK CEMENT PLASTER.
6. PROPOSED GUTTERLINES ADJACENT TO INLETS WITH 8" HOODS SHALL BE DISHED BY 2" (SEE DETAIL).
7. ALL INLETS AND MANHOLES SHALL BE CONSTRUCTED IN ACCORDANCE WITH THE CURRENT NJDOT STANDARD SPECIFICATIONS FOR ROAD AND BRIDGE CONSTRUCTION AND ITS AMENDMENTS.

TYPE "B" INLET W/ ECO CURB PIECE
N.T.S.

Heavy Duty Bicycle Safe Grate
Phase II Type

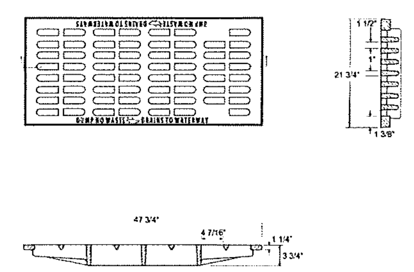

Notes: Pattern Number: 2617/2618

1. Material - Gray Cast Iron, ASTM A48-83, Class 30B
2. Loading - AASHTO HS20-44 Highway Loading.
3. Castings supplied without surface coating.

TYPE B INLET FRAME
N.T.S.

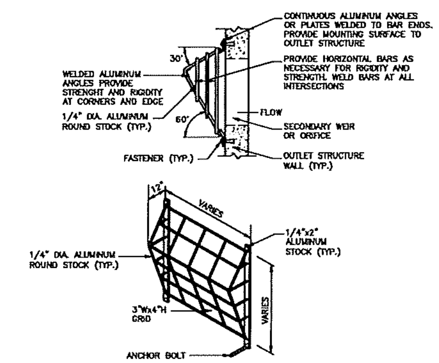

TRIANGULAR TRASH RACK DETAIL
N.T.S.

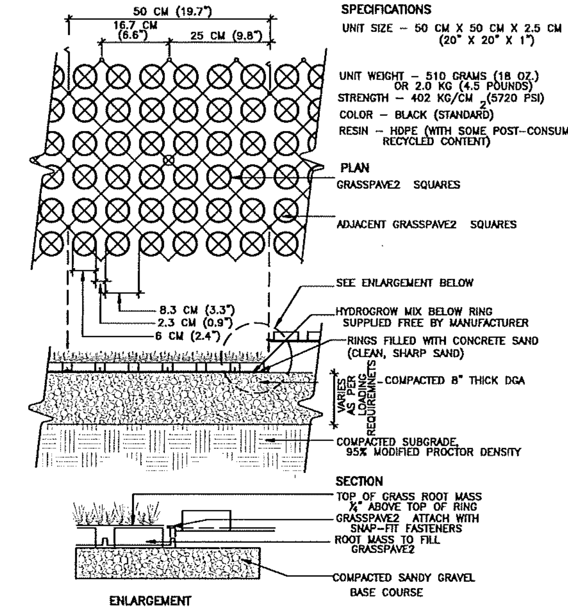

SPECIFICATIONS
UNIT SIZE - 50 CM X 50 CM X 2.5 CM (20" X 20" X 1")
UNIT WEIGHT - 510 GRAMS (18 OZ.) OR 2.0 KG (4.5 POUNDS)
STRENGTH - 402 KG/CM 2 (5720 PSI)
COLOR - BLACK (STANDARD)
RESIN - HDPE (WITH SOME POST-CONSUMER RECYCLED CONTENT)

PLAN
GRASSPAVE2 SQUARES
ADJACENT GRASSPAVE2 SQUARES

GRASS PAVER DETAIL
N.T.S.

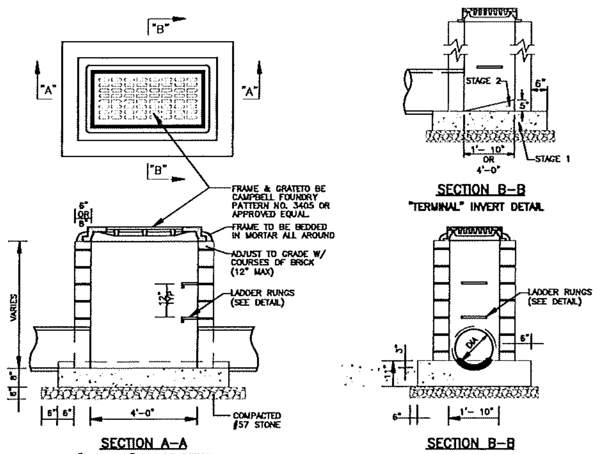

GENERAL NOTES: INLET TYPE A & C
1. INLETS MAY BE CONSTRUCTED OF BRICK, CONCRETE, CONCRETE BLOCK, OR PRECAST CONCRETE. WALLS SHALL BE 8" THICK IF BRICK AND 6" THICK IF CONCRETE, CONCRETE BLOCK, OR PRECAST CONCRETE. CONCRETE FOR FOUNDATIONS AND INVERTS SHALL BE CLASS B.
2. WHEN THE DEPTH OF NON-PRECAST INLET EXCEEDS 10 FT, FROM GRATE TO INVERT. THE THICKNESS OF THE WALLS BELOW A DEPTH OF 8 FT SHALL BE INCREASED TO 12", UNLESS ROCK IS ENCOUNTERED.
. WHEN THE DEPTH OF PRECAST INLET EXCEEDS 10 FFROM GRATE TO INVERT. THE THICKNESS OF THE FOUNDATIONSHALL BE INCREASED TO 12", UNLESS ROCK IS ENCOUNTERED.
THE WALLS SHALL BE PLASTERED BOTH INSIDE AND OUTSIDE WITH 1/2" THICK CEMENT PLASTER.
5. FOUNDATION AND INVERT TO BE CONSTRUCTED IN TWO STAGES. THE TOP SUFRACE OF STAGE 1 TO BE LEFT ROUGH.
6. ALL INLETS AND MANHOLES SHALL BE CONSTRUCTED IN ACCORDANCE WITH THE CURRENT NJDOT STANDARD SPECIFICATIONS FOR ROAD AND BRIDGE CONSTRUCTION AND ITS AMENDMENTS.

TYPE "A" INLET
N.T.S.

Heavy Duty Inlet Frame with Bicycle Safe Grate

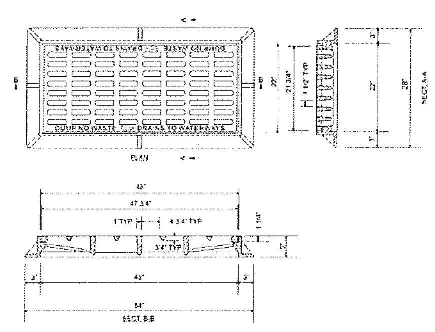

NOTES Pattern Number
1. MATERIAL: Gray Cast Iron ASTM A48-83 Class 35B: 34050000
2. AASHTO HS25 Highway Loading
3. Supplied without surface coating
4. Made in USA

TYPE A INLET FRAME
N.T.S.

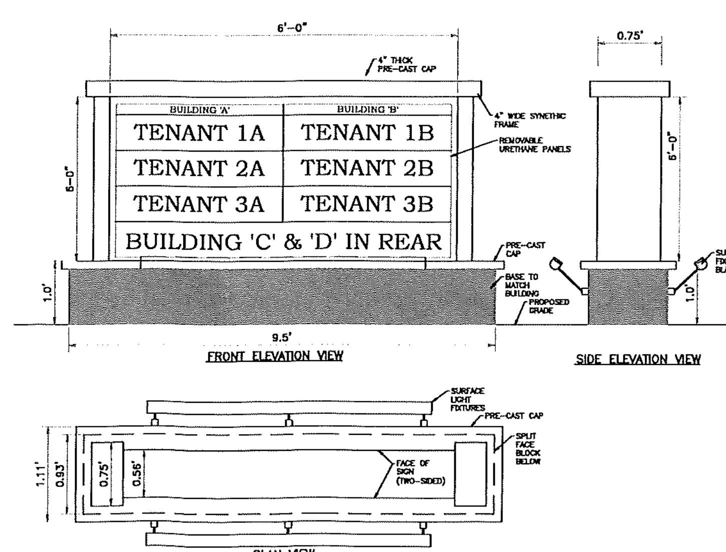

FREESTANDING DEVELOPMENT SIGN DETAIL (FRONT)
TOTAL SIGN FACE AREA: 36 SF (PER SIDE)
N.T.S.

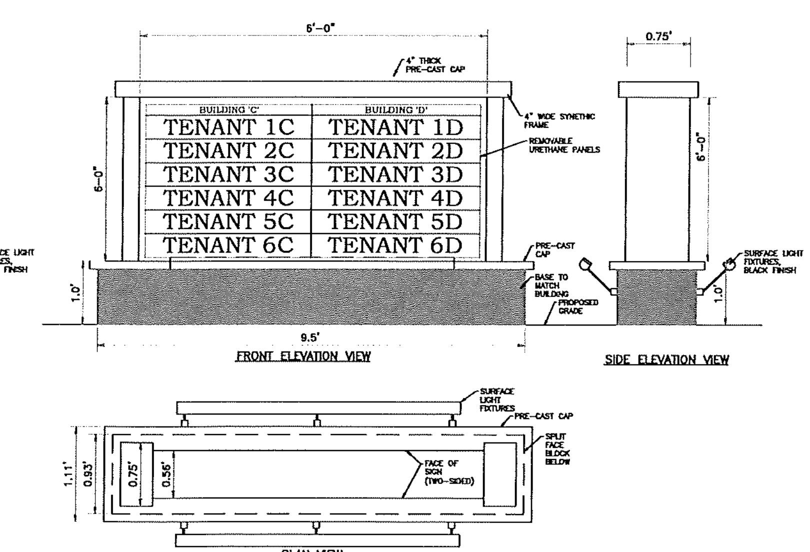

FREESTANDING DIRECTORY SIGN DETAIL (REAR)
TOTAL SIGN FACE AREA: 36 SF (PER SIDE)
N.T.S.

DWG. NAME: W:\PROJECT FILES\PD23 Projects\PD23-129 - 455 Main Street, Twp of Mantua, Gloucester County\09-AUTOCAD\DESIGN\details.dwg

K2 Consulting Engineers, Inc.
Professional Civil Engineers
Certificate of Authorization #24GA28187400
36 Tanner Street, Suite 100
Haddonfield, NJ 08033
Phone - 856.310.5205
Fax - 856.616.2441
www.K2CE.com

REVISION	DATE	BY

CONSTRUCTION DETAILS
455 MAIN STREET
BLOCK 160 - LOT 13 - TAX MAP SHEET 31
SITUATE IN THE
TOWNSHIP OF MANTUA, GLOUCESTER COUNTY, NEW JERSEY

JOHN W. KORNICK, P.E.
Professional Engineer, New Jersey Lic. No. 24GE04928500

DATE: 06/30/2025
DESIGN BY: WFR
DRAWN BY: WFR
SCALE: N.T.S.
JOB NO.: PD23-129
SHEET 23 OF 27

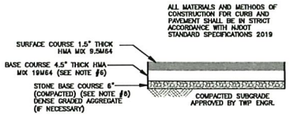

1. "COLD WEATHER LIMITATIONS", AS DESCRIBED IN SECTION 401.03.07, OF THE 2007 NJDOT STD. SPECIFICATIONS, MUST BE ADHERED TO.
2. PAVING SECTION BASED ON C.B.R. OF TEN OR BETTER
3. PRIME COAT TO BE APPLIED AT A RATE OF 0.10 GAL./S.Y.
4. A TACK COAT (EMULSIFIED ASPHALT RS-1) SHOULD BE APPLIED TO HMA BASE COURSE AT 0.08 GAL./SY PRIOR TO OVERLAY.
5. SUBGRADE SHALL BE COMPACTED TO A DENSITY NOT LESS THAN NINETY-FIVE (95) PERCENT OF THE MAXIMUM DENSITY.
6. CONTRACTOR SHALL COORDINATE WITH THE DESIGN ENGINEER AND CITY ENGINEER, ON-SITE CALIFORNIA BEARING RATIO (CBR) TESTING OF PAVING BASE COURSE. IF FOUND TO BE IN COMPLIANCE, MINIMUM THICKNESS FOR BASE COURSE AND STONE BASE COURSE SHALL BE FOUR AND ONE-HALF (4.5) INCHES. OTHERWISE, BASE COURSE THICKNESS SHALL BE DIRECTED BY THE TOWNSHIP ENGINEER.

ON-SITE PAVEMENT DETAIL
N.T.S.

1. ALL MATERIALS AND METHODS OF CONSTRUCTION FOR SIDEWALK SHALL BE IN STRICT ACCORDANCE WITH NJDOT STANDARD SPECIFICATIONS 2019 WITH REVISIONS & ADDENDUMS.
2. ½" BITUMINOUS EXPANSION JOINTS TO BE INSTALLED AT 20' INTERVALS
3. SCORED CONTRACTION JOINTS TO BE INSTALLED AT 5' INTERVALS.

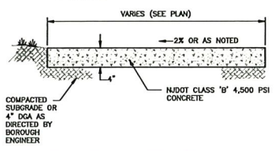

CONCRETE SIDEWALK DETAIL
N.T.S.

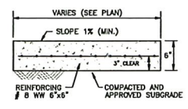

NOTES:
ALL MATERIALS AND METHODS OF CONSTRUCTION FOR CURB AND PAVEMENT SHALL BE IN STRICT ACCORDANCE WITH NJDOT STANDARD SPECIFICATIONS 2019

CONCRETE SHALL BE NJDOT CLASS 'B', (4,500 PSI VERIFICATION STRENGTH AFTER 28 DAYS, AIR ENTRAINMENT 6% ± 1.5%).

CONCRETE SURFACE SHALL BROOM FINISHED AFTER FLOATING.

1/2" PREFORMED EXPANSION JOINT FILLER BITUMINOUS TYPE CONFORMING TO A.A.S.H.T.O. SPEC.'S M-33 TO BE INSTALLED BETWEEN PAD AND ASPHALT BASE COURSE.

CONCRETE PAVEMENT SECTION DETAIL
N.T.S.

NOTE: ALL DIRECTIONAL TRAFFIC CONTROL MARKINGS ARE TO BE PAINTED WITH WHITE THERMOPLASTIC PAINT

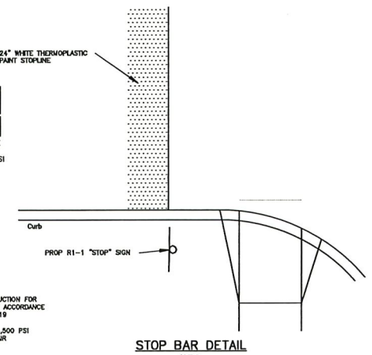

STOP BAR DETAIL
N.T.S.

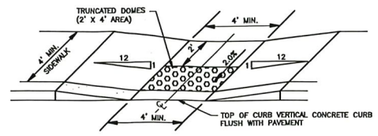

TYPE 2 HANDICAP RAMP (SIDEWALK ADJACENT TO CURB)
N.T.S.

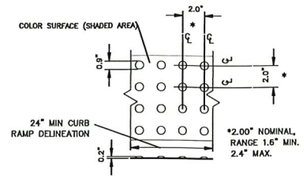

DOME SPACING

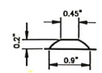

DOME SECTION

NOTE:
TRUNCATED DOMES SHALL BE ALIGNED ON A SQUARE GRID IN THE PREDOMINANT DIRECTION OF TRAVEL.

DETECTABLE WARNING SURFACE
N.T.S.

CURB SIZE	DIM. "A"	DIM. "B"	DIM. "C"	DIM. "D"
9"x18"	18"	6"	17.5"	4 1/2"

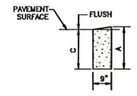

SECTION A-A

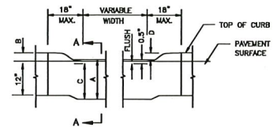

NOTE:
TRANSVERSE EXPANSION JOINTS, 1/2" WIDE SHALL BE PROVIDED AT INTERVALS OF NOT MORE THAN 8' AND FILLED WITH PRE FORMED BITUMINOUS CELLULAR TYPE JOINT FILLER. LONGITUDINAL JOINTS, 1/2" WIDE, SHALL BE PROVIDED BETWEEN CURBS AND ABUTTING SIDEWALKS, AND SHALL BE FILLED WITH PRE FORMED BITUMINOUS TYPE JOINT FILLER. THE TOP OF ALL JOINT FILLER SHALL BE 1/2" BELOW THE TOP OF THE SIDEWALK AND FILLED WITH JOINT FILLER (SIKAFLEX-1A OR APPROVED EQUAL)

DEPRESSED CURB DETAIL
N.T.S.

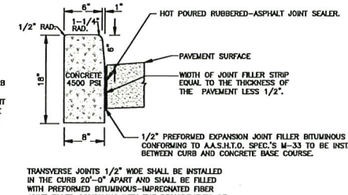

TRANSVERSE JOINTS 1/2" WIDE SHALL BE INSTALLED IN THE CURB 20'-0" APART AND SHALL BE FILLED WITH PREFORMED BITUMINOUS-IMPREGNATED FIBER JOINT FILLER COMPLYING WITH THE REQUIREMENTS OF A.A.S.H.T.O. SPEC. M-213, RECESSED 1/4" IN FROM FRONT FACE AND TOP OF CURB. PROVIDE DUMMY (FORMED) JOINTS MIDWAY BETWEEN EXPANSION JOINTS. EXPANSION JOINTS THRU AND ADJACENT TO THE CURB CONTRACTION JOINTS SHALL BE SPACED AT A MAXIMUM OF 14' AND ARE TO BE A MINIMUM OF 8' DEEPER THEY MAY BE CUT ENTIRELY THROUGH AT THE OPTION OF THE CONTRACTOR.

CONCRETE VERTICAL CURB DETAIL
N.T.S.

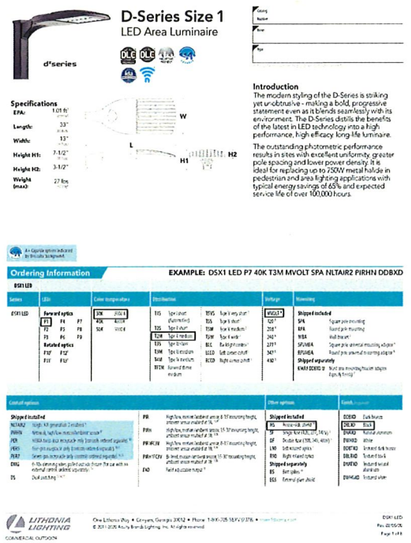

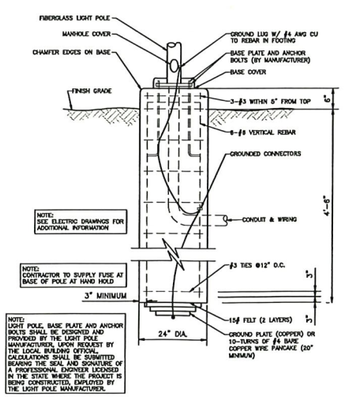

LIGHT DETAIL
N.T.S.

AUTEL

MaxiCharger
AC Floor Standing
19.2kW*2

EV CHARGING EQUIPMENT SPECIFICATIONS
N.T.S.

Technical Specifications

Product Information	
Input/output power rating and current	2*19.2kW (240V AC*80A) Output amperage adjustable via mobile app, from 6A to 80A
Input/output voltage	208V±15%, 240V±15%, 50Hz
Network type	L1/N+PE, L1/L2+PE
Input cord	Hardwired
Connector type	SAE J1772, 24.6' (7.5m) or 16.4' (5m)
Ground fault detection	20mA CCID
Protection	Overcurrent, overvoltage, undervoltage, integrated surge protection
Card reader	Optional: ISO 15693, ISO 14443, NFC
Power measurement accuracy	+/- 1.0% from 1% to full scale
General Characteristics	
Enclosure rating	NEMA 3R
Operating altitude	6561.7' (2000m)
Operating temperature range	-40°F~122°F (-40°C~50°C)
Storage temperature range	-40°F~150°F (-40°C~65°C)
Mounting	Wall or floor using a pedestal
Dimensions (H*W*D)	24.60"x12.6"x5.7" (625*320*170mm)
User Interface	
Status indication	LED / APP / LCD (8 inch 1280*720 touch screen)
User interface	Autel Charge APP, Autel Charge Cloud
Connectivity	Bluetooth, Wi-Fi, Ethernet, 4G, RS485
Communication protocols	OCPP 1.6J (Can be upgraded to OCPP 2.0.1 later)
User authentication	APP, RFID card, Credit Cards (Optional)
Software Update	
	OTA updates via web portal
Certification and Standards	
Safety and compliance	UL 2231-1, UL 2231-2, UL2594, NEC Article 625, CSA C22.2, UL 916
EMC compliance	FCC 15 Class B
Certification	Energy Star, OpenADR 2.0b
Warranty	36 months, warranty extension possible

R1-1
30"X30"
STOP SIGN
N.T.S.

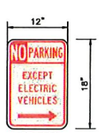

R7-111
NO PARKING 'EV' SIGN
N.T.S.

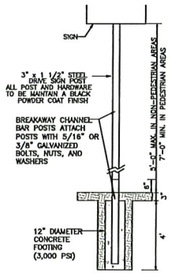

SIGN POST DETAIL
N.T.S.

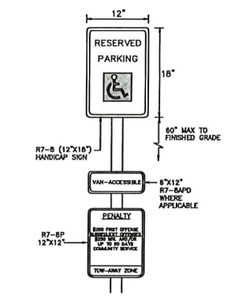

ACCESSIBLE PARKING SIGN
N.T.S.

R7-113AP
'EV' PARKING SIGN 1
N.T.S.

R7-113BP
'EV' PARKING SIGN 2
N.T.S.

NOTES:
1. STAKE ALL EVERGREEN TREES UNDER 8 FT. GUY TREES 8 FT. AND OVER
2. TREE SHALL BEAR SAME RELATION TO FINISHED GRADE AS IT BORE TO PREVIOUS GRADE IN THE NURSERY
3. PRUNE ONLY TO REMOVE DAMAGED OR BROKEN BRANCHES. LEADER OF TREE SHALL NEVER BE CUT
4. ROOT FLARE SHALL BE EXPOSED, AND IS NOT TO BE IN CONTACT WITH THE MULCH.

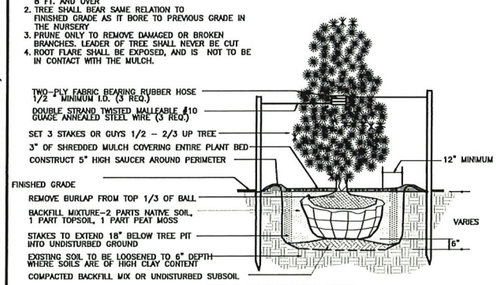

EVERGREEN TREE PLANTING DETAIL
N.T.S.

NOTES:
1. DO NOT PRUNE EVERGREENS, EXCEPT TO REMOVE DEAD AND BROKEN BRANCHES
2. THIN BRANCHES AND FOLIAGE (NOT ALL BRANCH TIPS) BY 1/3, RETAINING NORMAL PLANT SHAPE (EXCEPT EVERGREEN).
3. ROOT FLARE SHALL BE EXPOSED, AND IS NOT TO BE IN CONTACT WITH THE MULCH.

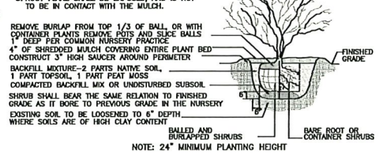

SHRUB PLANTING DETAIL
N.T.S.

NOTE:
1. ALL TREES UNDER 3" IN CALIPER SHALL BE STAKED ALL TREES 3" IN CALIPER AND GREATER SHALL BE GUYED
2. ALL TREES SHALL BE PRUNED TO THIN AND SHAPE CANOPY. LEADER OF TREE SHALL NEVER BE CUT
3. TREE SHALL BEAR SAME RELATION TO FINISHED GRADE AS IT BORE TO PREVIOUS GRADE IN THE NURSERY
4. ROOT FLARE SHALL BE EXPOSED, AND IS NOT TO BE IN CONTACT WITH THE MULCH.

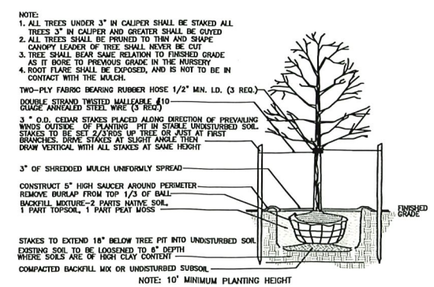

DECIDUOUS TREE PLANTING DETAIL
N.T.S.

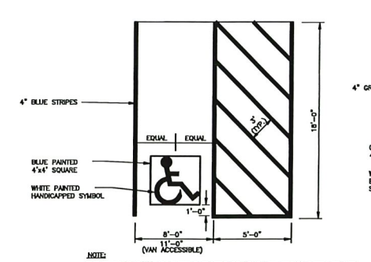

NOTE:
THE STRIPING SHALL BE THERMO PLASTIC OR LONG LIFE EPOXY, INSTALLED WITH REFLECTIVE BEADING.

HANDICAPPED PARKING DETAIL
N.T.S.

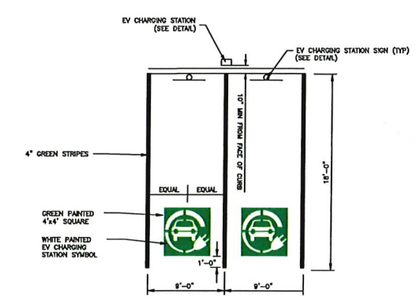

1. THE STRIPING SHALL BE THERMO PLASTIC OR LONG LIFE EPOXY, INSTALLED WITH REFLECTIVE BEADING.
2. EV CHARGING STATION WITHIN HANDICAPPED PARKING STALL TO FOLLOW HANDICAP PARKING STALL DIMENSIONAL REQUIREMENTS.

EV CHARGING STATION DETAIL
N.T.S.

K2 Consulting Engineers, Inc.
Professional Civil Engineers
Certificate of Authorization #24GA28187400
36 Tanner Street, Suite 100
Haddonfield, NJ 08033
Phone - 856.310.5205
Fax - 856.616.2441
www.K2CE.com

DATE	REVISION	BY

CONSTRUCTION DETAILS
455 MAIN STREET
BLOCK 160 - LOT 13 - TAX MAP SHEET 31
SITUATE IN THE
TOWNSHIP OF MANTUA, GLOUCESTER COUNTY, NEW JERSEY

JOHN W. KORNICK, P.E.
Professional Engineer, New Jersey Lic. No. 24GE04928500

DATE: 06/30/2025
DESIGN BY: WFR
DRAWN BY: WFR
SCALE: N.T.S.
JOB NO.: PD23-129
SHEET 24 OF 27

DWG. NAME: W:\PROJECT FILES\PD23 Projects\PD23-129 - 455 Main Street, Twp of Mantua, Gloucester County\09-AUTOCAD\DESIGN\details.dwg

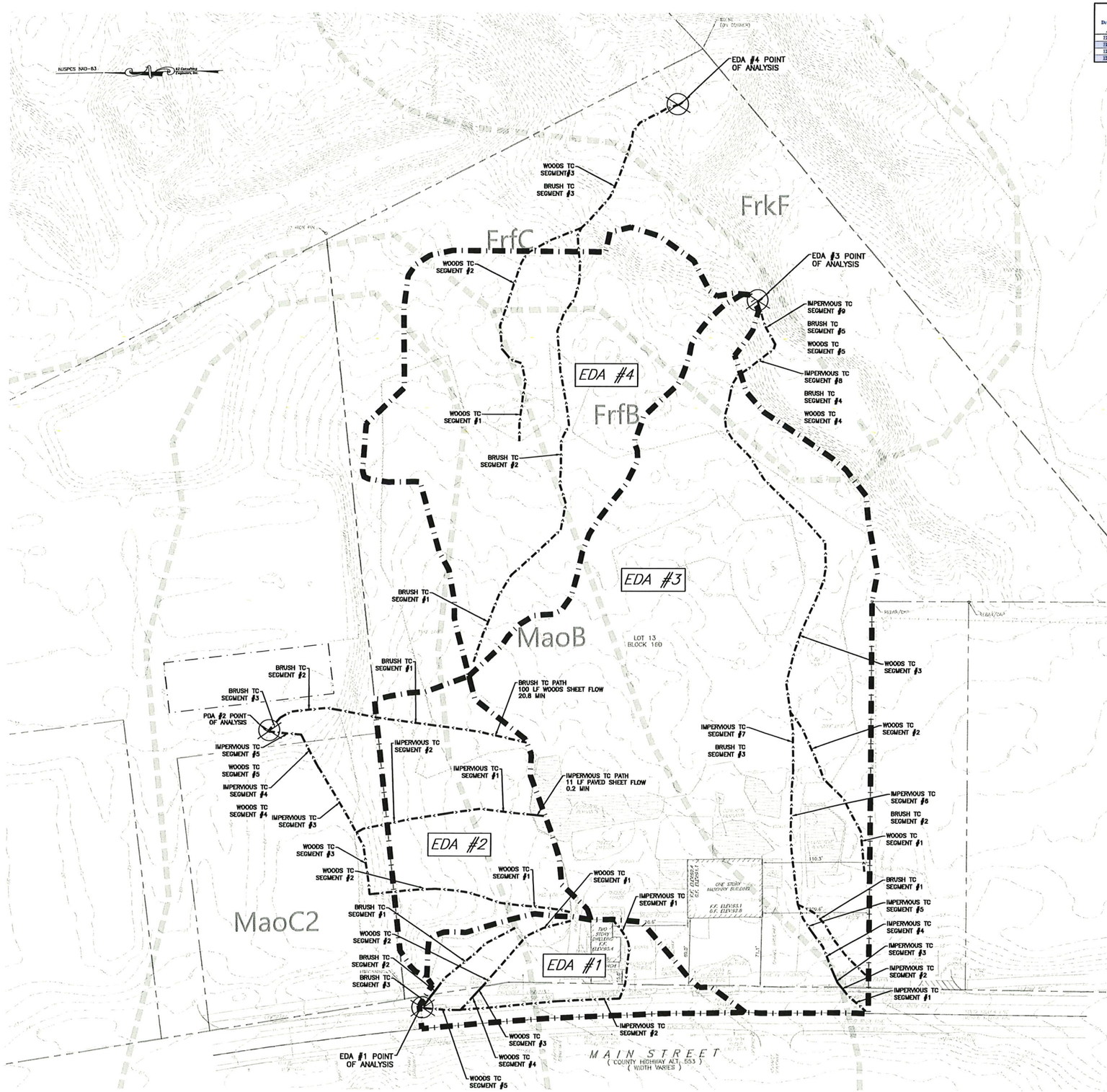

Drainage Area	TOTAL AREA (acres)	IMPERVIOUS AREA (acres) CN=98	WOODED 'B' SOIL AREA (acres) CN=55	WOODED 'C' SOIL AREA (acres) CN=70	WOODED 'D' SOIL AREA (acres) CN=77	BRUSH 'B' SOIL AREA (acres) CN=48	BRUSH 'C' SOIL AREA (acres) CN=65	BRUSH 'D' SOIL AREA (acres) CN=73	GRAVEL "B" SOIL AREA (acres) CN=96	GRAVEL "C" SOIL AREA (acres) CN=96
EDA #1	0.613	0.201	0.000	0.015	0.029	0.000	0.118	0.147	0.000	0.002
EDA #2	0.907	0.511	0.000	0.268	0.479	0.000	0.056	0.043	0.000	0.000
EDA #3	4.322	0.540	0.907	0.000	0.000	1.084	0.749	0.000	0.168	0.265
EDA #4	2.154	0.000	0.845	0.274	0.047	0.192	0.560	0.235	0.000	0.000

EDA#1 EXISTING TIME OF CONCENTRATION SUMMARY

Drainage Area	Flow Segment	Flow Type	Surface	Flow Length (ft)	Slope	n value	Total Time
EDA#1 Impervious	1	Sheet	Paved	88	0.032	0.011	0.9
	2	Shallow Concentrated	Paved	204	0.0156	-	1.3
						Total Time	2.2
EDA#1 Woods	1	Sheet	Wooded	100	0.04	0.4	15.7
	2	Shallow Concentrated	Brush	16	0.023	-	0.4
	3	Shallow Concentrated	Paved	13	0.02	-	0.1
	4	Shallow Concentrated	Grass	21	0.015	-	0.4
	5	Shallow Concentrated	Paved	39	0.019	-	0.2
						Total Time	16.8
EDA#1 Brush	1	Sheet	Brush	100	0.024	0.4	19.3
	2	Shallow Concentrated	Paved	12	0.02	-	0.1
	3	Shallow Concentrated	Grass	12	0.02	-	0.2
						Total Time	19.6

EDA#2 EXISTING TIME OF CONCENTRATION SUMMARY

Drainage Area	Flow Segment	Flow Type	Surface	Flow Length (ft)	Slope	n value	Total Time
EDA#2 Impervious	1	Sheet	Paved	11	0.018	0.011	0.2
	2	Sheet	Woods	69	0.043	0.4	13.9
	3	Shallow Concentrated	Woods	96	0.073	-	1.2
	4	Shallow Concentrated	Grass	77	0.005	-	2.6
	5	Shallow Concentrated	Grass	40	0.1	-	0.3
	6	Shallow Concentrated	Paved	34	0.03	-	0.2
						Total Time	18.4
EDA#2 Woods	1	Sheet	Woods	100	0.0474	0.4	14.7
	2	Shallow Concentrated	Woods	68	0.05	-	0.9
	3	Shallow Concentrated	Grass	143	0.005	-	4.8
	4	Shallow Concentrated	Grass	40	0.1	-	0.3
	5	Shallow Concentrated	Paved	34	0.03	-	0.2
						Total Time	20.9
EDA#2 Open Space	1	Sheet	Brush	100	0.02	0.15	20.8
	2	Shallow Concentrated	Brush	96	0.1	-	1
	3	Shallow Concentrated	Grass	60	0.02	-	1
	4	Shallow Concentrated	Paved	20	0.02	-	0.1
						Total Time	22.9

EDA#3 EXISTING TIME OF CONCENTRATION SUMMARY

Drainage Area	Flow Segment	Flow Type	Surface	Flow Length (ft)	Slope	n value	Total Time
EDA#3 Impervious	1	Sheet	Paved	29	0.027	0.011	0.4
	2	Sheet	Grass	8	0.08	0.15	0.7
	3	Sheet	Paved	11	0.02	0.011	0.2
	4	Sheet	Brush	52	0.055	0.4	8.2
	5	Shallow Concentrated	Paved	32	0.047	-	0.5
	6	Shallow Concentrated	Brush	140	0.02	-	0.8
	7	Shallow Concentrated	Brush	435	0.02	-	10.3
	8	Shallow Concentrated	Brush	72	0.15	-	0.6
	9	Shallow Concentrated	Grass Ditch	50	0.01	-	0.6
						Total Time	22.3
EDA#3 Woods	1	Sheet	Woods	100	0.02	0.4	20.8
	2	Shallow Concentrated	Brush	85	0.015	-	2.3
	3	Shallow Concentrated	Brush	374	0.02	-	8.8
	4	Shallow Concentrated	Brush	72	0.15	-	0.6
	5	Shallow Concentrated	Grass Ditch	50	0.01	-	0.6
						Total Time	33.1
EDA#3 Brush	1	Sheet	Brush	100	0.054	0.4	14
	2	Shallow Concentrated	Paved	140	0.02	-	0.8
	3	Shallow Concentrated	Brush	435	0.02	-	10.3
	4	Shallow Concentrated	Brush	72	0.15	-	0.6
	5	Shallow Concentrated	Grass Ditch	50	0.01	-	0.6
						Total Time	26.3

EDA#4 EXISTING TIME OF CONCENTRATION SUMMARY

Drainage Area		Flow Type	Surface	Flow Length (ft)	Slope	n value	Total Time
EDA#2 Woods	1	Sheet	Woods	100	0.04	0.4	15.7
	2	Shallow Concentrated	Woods	170	0.04	-	2.8
	3	Shallow Concentrated	Woods	170	0.1	-	1.8
						Total Time	20.3
EDA#2 Open Space	1	Sheet	Brush	100	0.04	0.15	15.7
	2	Shallow Concentrated	Brush	385	0.036	-	6.8
	3	Shallow Concentrated	Woods	170	0.1	-	1.8
						Total Time	24.3

K2 Consulting Engineers, Inc.
Professional Civil Engineers
Certificate of Authorization #24GA28187400
36 Tanner Street, Suite 100
Haddonfield, NJ 08033
Phone - 856.310.5205
Fax - 856.616.2441
www.K2CE.com

DATE	REVISION	BY

PRE-DEVELOPED DRAINAGE AREA PLAN
455 MAIN STREET
BLOCK 160 - LOT 13 - TAX MAP SHEET 31
SITUATE IN THE
TOWNSHIP OF MANTUA, GLOUCESTER COUNTY, NEW JERSEY

JOHN W. KORNICK, P.E.
Professional Engineer, New Jersey Lic. No. 24GE04928500

DATE: 06/30/2025
DESIGN BY: WFR
DRAWN BY: WFR
SCALE: 1"=50'
JOB NO.: PD23-129
SHEET 25 OF 27

DWG. NAME: W:\PROJECT FILES\PD23 Projects\PD23-129 - 455 Main Street, Twp of Mantua, Gloucester County\09-AUTOCAD\DESIGN\EDA.dwg

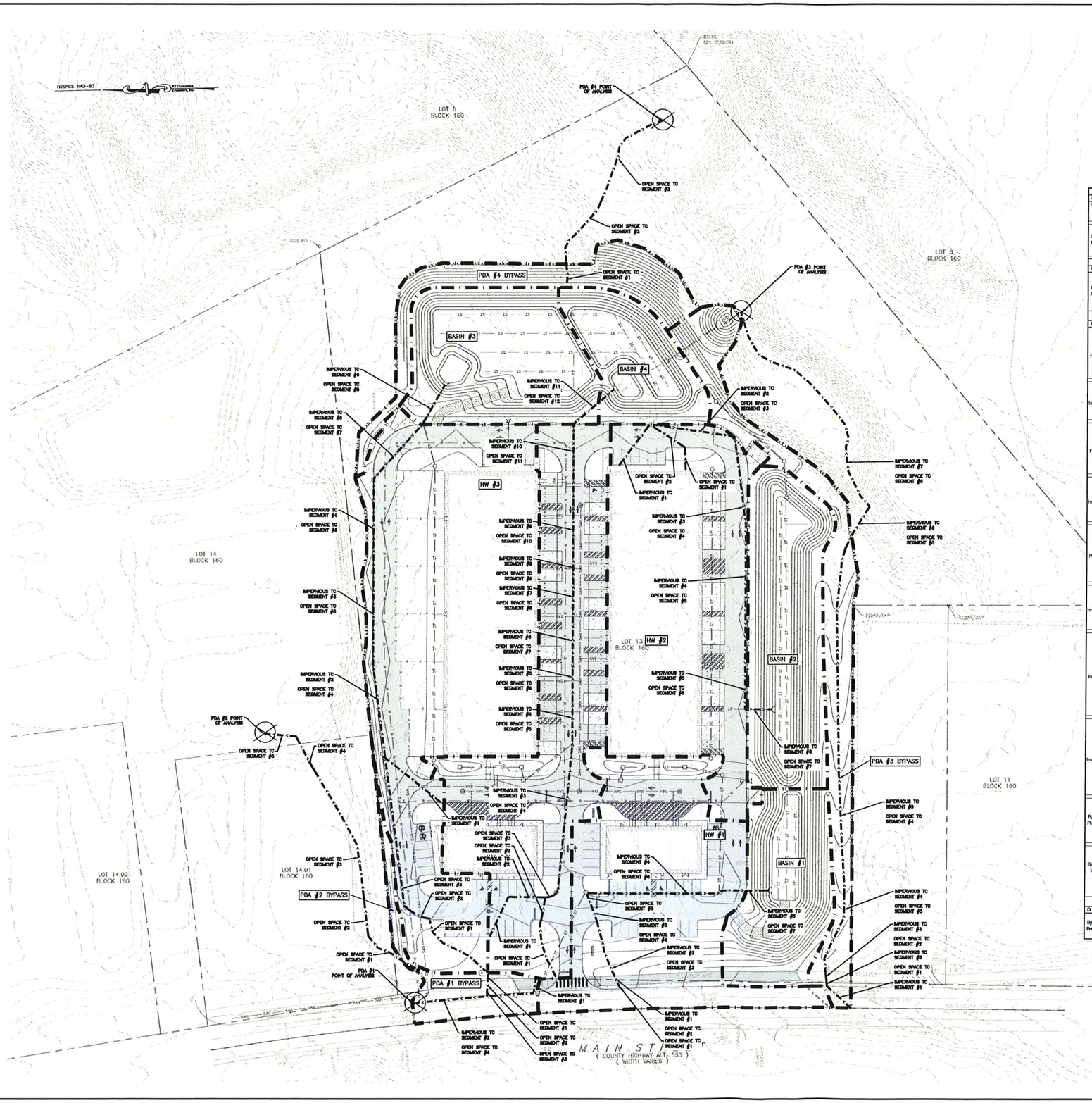

Drainage Area	TOTAL AREA (acres)	IMPERVIOUS AREA (acres) CN=98	OPEN SPACE 'B' SOIL AREA (acres) CN=61	OPEN SPACE 'C' SOIL AREA (acres) CN=74	OPEN SPACE 'D' SOIL AREA (acres) CN=80
PDA #1 Bypass	0.139	0.098	0.000	0.002	0.039
PDA #2 Bypass	0.038	0.000	0.000	0.000	0.038
HW#1	1.054	0.774	0.047	0.233	0.000
Basin 1	0.434	0.041	0.284	0.109	0.000
HW#2	1.252	1.204	0.048	0.000	0.000
Basin 2	0.626	0.000	0.626	0.000	0.000
HW#3	1.846	1.575	0.000	0.000	0.271
Basin 3	0.598	0.020	0.322	0.213	0.043
HW #4	1.229	1.024	0.020	0.150	0.035
Basin 4	0.329	0.000	0.329	0.000	0.000
PDA #3 Bypass	0.520	0.021	0.495	0.004	0.000
PDA #4 Bypass	0.311	0.000	0.231	0.033	0.047

PDA#1 PROPOSED TIME OF CONCENTRATION SUMMARY

Drainage Area	Row Segment	Row Type	Surface	Pipe Run	Pipe Diameter (in)	Row Length (ft)	Slope	n value	McQuen-Spiess Limitation (ft)	Sheet Row Length Used (ft)	Total Time
Bypass PDA#1 Impervious Cover	1	Sheet	Paved	-	-	14	0.02	0.011	1285.6	14	0.2
	2	Shallow Concentrated	Paved	-	-	125	0.017	-	-	-	0.8
										Total Time	1
Bypass PDA#1 Pervious Cover	1	Sheet	Grass	-	-	7	0.02	0.15	94.3	7	1.1
	2	Shallow Concentrated	Paved	-	-	10	0.02	0.011	1285.6	10	0.2
	3	Shallow Concentrated	Grass	-	-	6	0.02	0.15	54.3	6	1
	4	Shallow Concentrated	Paved	-	-	75	0.017	-	-	-	0.5
										Total Time	2.8

PDA#2 PROPOSED TIME OF CONCENTRATION SUMMARY

Drainage Area	Row Segment	Row Type	Surface	Pipe Run	Pipe Diameter (in)	Row Length (ft)	Slope	n value	McQuen-Spiess Limitation (ft)	Sheet Row Length Used (ft)	Total Time
Bypass PDA#2 Pervious Cover	1	Sheet	Grass	-	-	60	0.1	0.15	210.8	60	3.3
	2	Sheet	Grass	-	-	40	0.005	0.15	47.1	40	7.9
	3	Shallow Concentrated	Grass	-	-	150	0.005	-	-	-	5.1
	4	Shallow Concentrated	Grass	-	-	40	0.1	-	-	-	0.3
	5	Shallow Concentrated	Paved	-	-	34	0.03	-	-	-	0.2
										Total Time	16.8

PDA#3 PROPOSED TIME OF CONCENTRATION SUMMARY

Drainage Area	Row Segment	Row Type	Surface	Pipe Run	Pipe Diameter (in)	Row Length (ft)	Slope	n value	McQuen-Spiess Limitation (ft)	Sheet Row Length Used (ft)	Total Time
Basin #1 Pervious Cover	1	Sheet	Grass	-	-	3	0.02	0.15	94.3	3	0.6
	2	Sheet	Paved	-	-	10	0.02	0.011	1285.6	13	0.2
	3	Sheet	Grass	-	-	60	0.05	0.15	149.1	60	4.4
	4	Sheet	Paved	-	-	24	0.045	0.011	1528.5	24	0.3
	5	Shallow Concentrated	Paved	-	-	6	0.045	-	-	-	0
	6	Pipe	-	CBR1-5 - CBR1-6	15	139	0.005	0.01	-	-	0.4
	7	Pipe	-	CBR1-6 - HW#1	15	50	0.0008	0.01	-	-	0.1
										Total Time	6
Basin #1 Impervious Cover	1	Sheet	Paved	-	-	10	0.02	0.011	1285.6	13	0.2
	2	Sheet	Grass	-	-	60	0.05	0.15	149.1	60	4.4
	3	Sheet	Paved	-	-	30	0.045	0.011	1528.5	24	0.3
	4	Pipe	-	CBR1-5 - CBR1-6	15	139	0.005	0.01	-	-	0.4
	5	Pipe	-	CBR1-6 - HW#1	15	50	0.0008	0.01	-	-	0.1
										Total Time	5.4
Basin #2 Pervious Cover	1	Sheet	Grass	-	-	25	0.02	0.15	94.3	25	3.1
	2	Sheet	Paved	-	-	40	0.02	0.011	1285.6	40	0.6
	3	Pipe	-	CBR2-1 - CBR2-2	15	85	0.005	0.01	-	-	0.3
	4	Pipe	-	CBR2-2 - CBR2-3	15	91	0.005	0.01	-	-	0.3
	5	Pipe	-	CBR2-3 - CBR2-4	15	92	0.005	0.01	-	-	0.3
	6	Pipe	-	CBR2-4 - CBR2-5	15	92	0.005	0.01	-	-	0.3
	7	Pipe	-	CBR2-5 - HW#2	18	25	0.01	0.01	-	-	0.1
										Total Time	5
Basin #2 Impervious Cover	1	Sheet	Paved	-	-	53	0.029	0.011	1548.1	53	0.6
	2	Pipe	-	CBR2-1 - CBR2-2	15	85	0.005	0.01	-	-	0.3
	3	Pipe	-	CBR2-2 - CBR2-3	15	91	0.005	0.01	-	-	0.3
	4	Pipe	-	CBR2-3 - CBR2-4	15	92	0.005	0.01	-	-	0.3
	5	Pipe	-	CBR2-4 - CBR2-5	15	92	0.005	0.01	-	-	0.3
	6	Pipe	-	CBR2-5 - HW#2	18	25	0.01	0.01	-	-	0.1
										Total Time	1.9
Basin #3 Pervious Cover	1	Sheet	Grass	-	-	83	0.03	0.15	115.5	83	1.1
	2	Shallow Concentrated	Paved	-	-	27	0.033	-	-	-	0.1
	3	Pipe	-	CBR3-1 - CBR3-2	15	160	0.01	0.01	-	-	0.4
	4	Pipe	-	CBR3-2 - CBR3-3	15	92	0.005	0.01	-	-	0.3
	5	Pipe	-	CBR3-3 - CBR3-4	15	92	0.005	0.01	-	-	0.3
	6	Pipe	-	CBR3-4 - CBR3-5	15	92	0.005	0.01	-	-	0.3
	7	Pipe	-	CBR3-5 - CBR3-7	15	76	0.0071	1.01	-	-	0.2
	8	Pipe	-	CBR3-7 - HW#3	18	43	0.01	0.01	-	-	0.1
										Total Time	2.8
Basin #3 Impervious Cover	1	Sheet	Paved	-	-	78	0.044	0.011	1906.9	78	0.3
	2	Pipe	-	CBR3-2 - CBR3-3	15	92	0.005	0.01	-	-	0.3
	3	Pipe	-	CBR3-3 - CBR3-4	15	92	0.005	0.01	-	-	0.3
	4	Pipe	-	CBR3-4 - CBR3-5	15	92	0.005	0.01	-	-	0.3
	5	Pipe	-	CBR3-5 - CBR3-7	15	76	0.0071	1.01	-	-	0.2
	6	Pipe	-	CBR3-7 - HW#3	18	43	0.01	0.01	-	-	0.1
										Total Time	1.5
Basin #4 Pervious Cover	1	Sheet	Grass	-	-	62	0.03	0.15	115.5	62	5.5
	2	Sheet	Paved	-	-	24	0.05	0.011	2226.8	24	0.2
	3	Shallow Concentrated	Paved	-	-	12	0.0125	-	-	-	0.1
	4	Pipe	-	CBR4-1 - CBR4-5	15	152	0.01	0.01	-	-	0.4
	5	Pipe	-	CBR4-5 - CBR4-6	15	38	0.005	0.01	-	-	0.1
	6	Pipe	-	CBR4-6 - CBR4-7	15	38	0.005	0.01	-	-	0.1
	7	Pipe	-	CBR4-7 - CBR4-8	15	38	0.005	0.01	-	-	0.1
	8	Pipe	-	CBR4-8 - CBR4-9	15	38	0.005	0.01	-	-	0.1
	9	Pipe	-	CBR4-9 - CBR4-10	18	38	0.005	0.01	-	-	0.1
	10	Pipe	-	CBR4-10 - CBR4-11	18	38	0.005	0.01	-	-	0.1
	11	Pipe	-	CBR4-11 - CBR4-12	18	81	0.005	0.01	-	-	0.2
	12	Pipe	-	CBR4-12 - HW#4	18	53	0.01	0.01	-	-	0.1
										Total Time	7.1
Basin #4 Impervious Cover	1	Sheet	Paved	-	-	46	0.023	0.011	1378.7	46	0.6
	2	Shallow Concentrated	Paved	-	-	51	0.0125	-	-	-	0.4
	3	Pipe	-	CBR4-1 - CBR4-5	15	152	0.01	0.01	-	-	0.4
	4	Pipe	-	CBR4-5 - CBR4-6	15	38	0.005	0.01	-	-	0.1
	5	Pipe	-	CBR4-6 - CBR4-7	15	38	0.005	0.01	-	-	0.1
	6	Pipe	-	CBR4-7 - CBR4-8	15	38	0.005	0.01	-	-	0.1
	7	Pipe	-	CBR4-8 - CBR4-9	15	38	0.005	0.01	-	-	0.1
	8	Pipe	-	CBR4-9 - CBR4-10	18	38	0.005	0.01	-	-	0.1
	9	Pipe	-	CBR4-10 - CBR4-11	18	38	0.005	0.01	-	-	0.1
	10	Pipe	-	CBR4-11 - CBR4-12	18	81	0.005	0.01	-	-	0.2
	11	Pipe	-	CBR4-12 - HW#4	18	53	0.01	0.01	-	-	0.1
										Total Time	2.3
Bypass PDA#3 Pervious Cover	1	Sheet	Grass	-	-	6	0.02	0.15	94.3	6	1
	2	Sheet	Paved	-	-	10	0.02	0.011	1285.6	10	0.2
	3	Sheet	Paved	-	-	84	0.047	0.15	144.5	84	5.9
	4	Shallow Concentrated	Grass	-	-	366	0.019	-	-	-	6.3
	5	Shallow Concentrated	Woods	-	-	50	0.13	-	-	-	0.5
	6	Shallow Concentrated	Grass Ditch	-	-	263	0.036	-	-	-	1.5
										Total Time	15.4
Bypass PDA#3 Impervious Cover	1	Sheet	Paved	-	-	34	0.015	0.011	1113.4	34	0.6
	2	Sheet	Grass	-	-	6	0.02	0.15	94.3	6	1
	3	Sheet	Paved	-	-	10	0.02	0.011	1285.6	10	0.2
	4	Sheet	Paved	-	-	50	0.047	0.15	144.5	50	3.9
	5	Shallow Concentrated	Grass	-	-	400	0.019	-	-	-	6.9
	6	Shallow Concentrated	Woods	-	-	50	0.13	-	-	-	0.5
	7	Shallow Concentrated	Grass Ditch	-	-	263	0.036	-	-	-	1.5
										Total Time	14.6

PDA#4 PROPOSED TIME OF CONCENTRATION SUMMARY

Drainage Area	Row Segment	Row Type	Surface	Pipe Run	Pipe Diameter (in)	Row Length (ft)	Slope	n value	McQuen-Spiess Limitation (ft)	Sheet Row Length Used (ft)	Total Time
Bypass PDA#4 Pervious Cover	1	Sheet	Grass	-	-	20	0.33	0.15	383.0	20	0.9
	2	Sheet	Grass	-	-	80	0.113	0.4	64.0	80	8.7
	3	Shallow Concentrated	Grass	-	-	115	0.08	-	-	-	5.1
										Total Time	14.7

K2 Consulting Engineers, Inc.
Professional Civil Engineers
Certificate of Authorization
#24GA28187400
36 Tanner Street, Suite 100
Haddonfield, NJ 08033
Phone - 856.310.5205
Fax - 856.616.2441
www.K2CE.com

DATE	REVISION	BY

POST-DEVELOPED DRAINAGE AREA PLAN
455 MAIN STREET
BLOCK 160 - LOT 13 - TAX MAP SHEET 31
SITUATE IN THE
TOWNSHIP OF MANTUA, GLOUCESTER COUNTY, NEW JERSEY

JOHN W. KORNICK, P.E.
Professional Engineer, New Jersey Lic. No. 24GE04928500

DATE: 06/30/2025
DESIGN BY: WFR
DRAWN BY: WFR
SCALE: 1"=50'
JOB NO.: PD23-129
SHEET 26 OF 27

DWG. NAME: W:\PROJECT FILES\PD23 Projects\PD23-129 - 455 Main Street, Twp of Mantua, Gloucester County\09-AUTOCAD\DESIGN\PDA.dwg

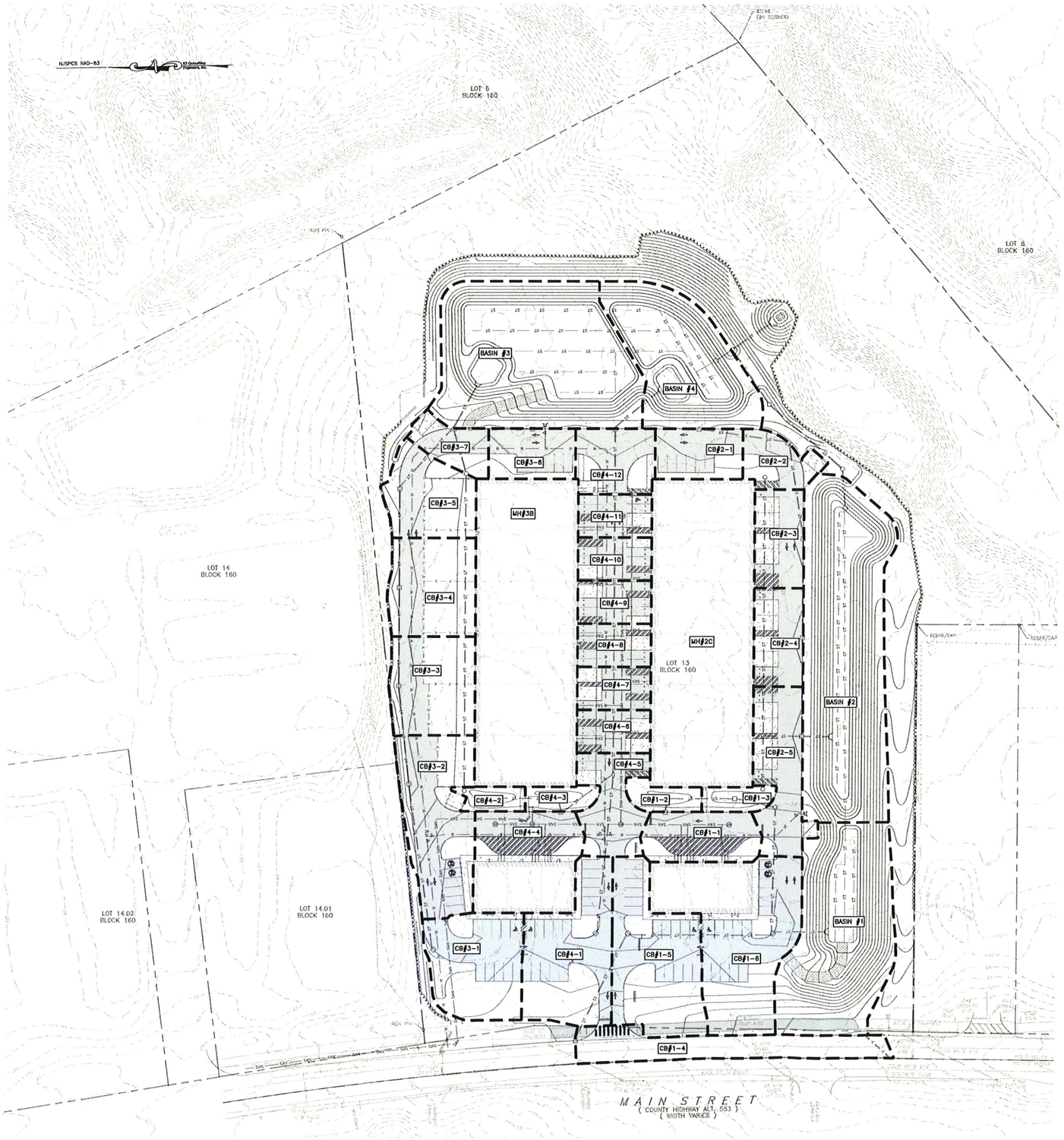

Sub Drainage Area	TOTAL AREA (acres)	IMPERVIOUS AREA (acres) CN=98	OPEN SPACE 'B' SOIL AREA (acres) CN=61	OPEN SPACE 'C' SOIL AREA (acres) CN=74	OPEN SPACE 'D' SOIL AREA (acres) CN=80
1-1	0.125	0.107	0.009	0.009	0.000
1-2	0.039	0.000	0.001	0.038	0.000
1-3	0.038	0.003	0.035	0.000	0.000
1-4	0.178	0.178	0.000	0.000	0.000
1-5	0.283	0.184	0.000	0.098	0.000
1-6	0.392	0.303	0.001	0.088	0.000
Basin 1	0.434	0.041	0.284	0.109	0.000
2-1	0.096	0.072	0.024	0.000	0.000
2-2	0.079	0.061	0.017	0.000	0.000
2-3	0.107	0.107	0.000	0.000	0.000
2-4	0.107	0.107	0.000	0.000	0.000
MH 2C	0.689	0.689	0.000	0.000	0.000
2-5	0.175	0.168	0.006	0.000	0.000
Basin 2	0.626	0.000	0.626	0.000	0.000
3-1	0.212	0.108	0.000	0.000	0.105
3-2	0.261	0.214	0.000	0.000	0.046
3-3	0.182	0.163	0.000	0.000	0.019
3-4	0.184	0.165	0.000	0.000	0.019
3-5	0.153	0.117	0.000	0.000	0.035
3-6	0.096	0.072	0.000	0.000	0.024
MH 3B	0.689	0.689	0.000	0.000	0.000
3-7	0.070	0.047	0.000	0.000	0.023
Basin 3	0.598	0.020	0.322	0.213	0.043
4-1	0.262	0.171	0.000	0.065	0.027
4-2	0.035	0.003	0.000	0.024	0.008
4-3	0.038	0.003	0.000	0.036	0.000
4-4	0.232	0.218	0.000	0.014	0.000
4-5	0.133	0.122	0.000	0.012	0.000
4-6	0.069	0.069	0.000	0.000	0.000
4-7	0.069	0.069	0.000	0.000	0.000
4-8	0.069	0.069	0.000	0.000	0.000
4-9	0.069	0.069	0.000	0.000	0.000
4-10	0.069	0.069	0.000	0.000	0.000
4-11	0.069	0.069	0.000	0.000	0.000
4-12	0.112	0.092	0.020	0.000	0.000
Basin 4	0.329	0.000	0.329	0.000	0.000

50 0 50 100
GRAPHIC SCALE OF FEET

K2 Consulting Engineers, Inc.
Professional Civil Engineers
Certificate of Authorization
#24GA28187400

36 Tanner Street, Suite 100
Haddonfield, NJ 08033
Phone - 856.310.5205
Fax - 856.616.2441
www.K2CE.com

DATE	REVISION	BY

CATCH BASIN DRAINAGE AREA PLAN
455 MAIN STREET
BLOCK 160 - LOT 13 - TAX MAP SHEET 31
SITUATE IN THE
TOWNSHIP OF MANTUA, GLOUCESTER COUNTY, NEW JERSEY

JOHN W. KORNICK, P.E.
Professional Engineer, New Jersey Lic. No. 24GE04928500

DATE: 06/30/2025
DESIGN BY: WFR
DRAWN BY: WFR
SCALE: 1"=50'
JOB NO.: PD23-129
SHEET 27 OF 27

DWG. NAME: W:\PROJECT FILES\PD23 Projects\PD23-129 - 455 Main Street, Twp of Mantua, Gloucester County\09-AUTOCAD\DESIGN\PDA.dwg